THIS DRAWING IS UNPUBLISHED. RELEASED FOR PUBLICATION 19
© COPYRIGHT 20 - ALL RIGHTS RESERVED.

LOC	DIST
AD	00

REVISIONS

P	LTR	DESCRIPTION	DATE	DWN	APVD
	B	REVISED PER ECO-18-020072	26DEC2018	R.L	H.L

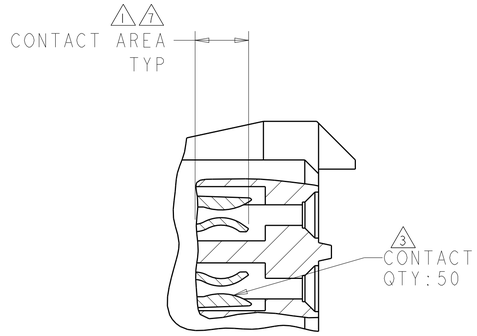

DETAIL M
SCALE 12:1

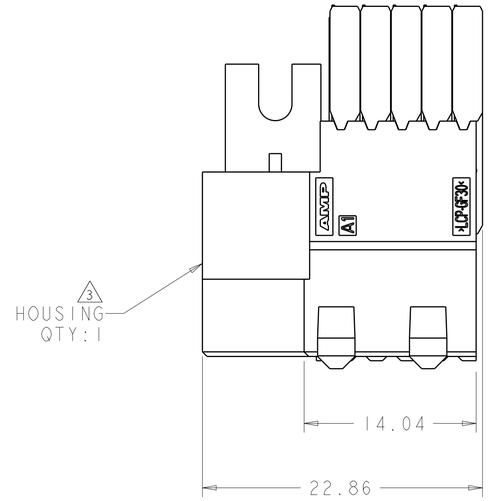

1. CONTACT MATING AREA MEETS THE PERFORMANCE REQUIREMENTS OF TE CONNECTIVITY PRODUCT SPECIFICATION 108-1957; BASED ON TELCORDIA GR-1217-CORE, APPLICATIONS IN UNCONTROLLED ENVIRONMENTS.
2. 0.76µm MIN TIN OVER 1.27µm MIN NICKEL
3. MATERIAL: CONTACT - COPPER ALLOY
   SHIELD - PHOSPHOR BRONZE
   HOUSING - LCP, UL94V-0
   CHICKLET - GLASS FILLED POLYESTER
4. REFERENCE APPLICATION SPEC 114-13020 FOR RECOMMENDED PLATED THRU HOLE DIAMETER AND PLATING THICKNESS.
5. DATUM AND BASIC DIMENSION ESTABLISHED BY CUSTOMER.
6. SEATING HEIGHT TO BOARD SURFACE.
7. CONTACT AREA LUBRICATED WITH BELLCORE APROVED LUBRICANT. TECHNICAL REFERENCE: GR-1217-CORE, ISSUE 1, NOVEMBER 1995.
8. DATE CODE
10. PART NUMBER

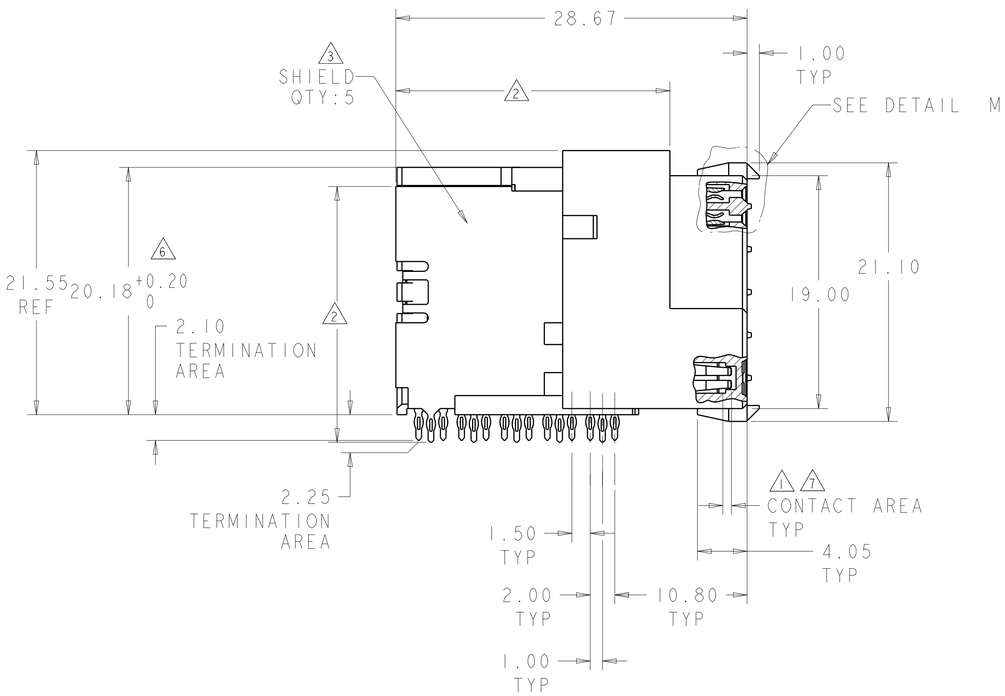

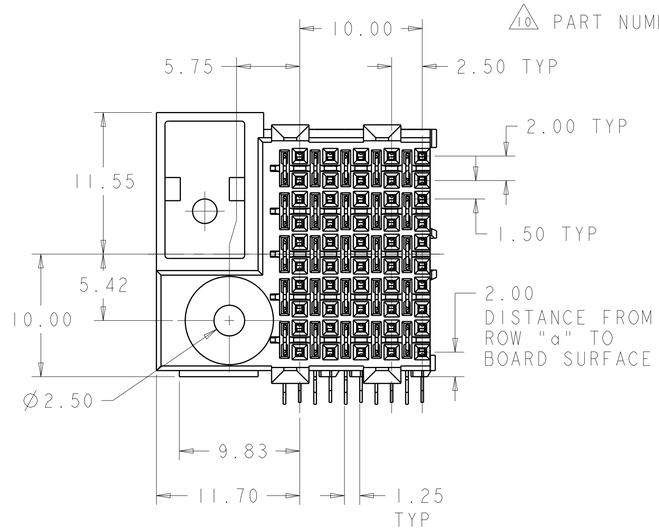

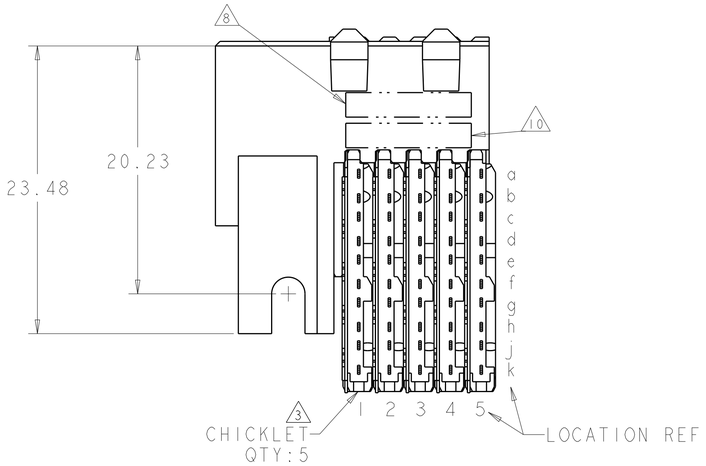

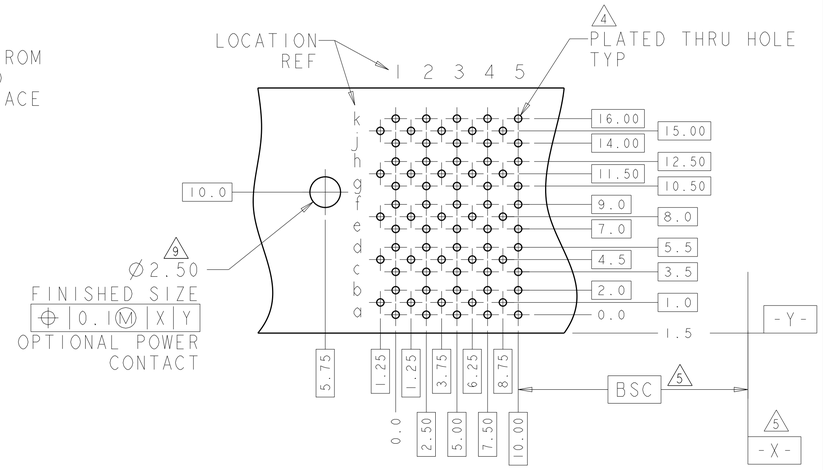

RECOMMENDED PRINTED
CIRCUIT BOARD LAYOUT
COMPONENT SIDE OF PRINTED CIRCUIT BOARD

5120793-1

PART NUMBER

THIS DRAWING IS A CONTROLLED DOCUMENT.

DIMENSIONS: mm

TOLERANCES UNLESS OTHERWISE SPECIFIED:
0 PLC ±-
1 PLC ±0.2
2 PLC ±0.13
3 PLC ±0.05
4 PLC ±-
ANGLES ±1

MATERIAL - 3

FINISH SOLDER TAIL: 2
CONTACT: 1

DWN	B.CARBO	08DEC04
CHK	R.PATTERSON	08DEC04
APVD	R.PATTERSON	08DEC04
PRODUCT SPEC	108-1957	
APPLICATION SPEC	114-13020	
WEIGHT	-	

TE Connectivity

NAME: RECEPTACLE ASSEMBLY, 50 POSITION ESD/POWER GROUND PIN, LEFT HAND, 10 ROW, DUAL BEAM, Z-PACK HS3

SIZE	CAGE CODE	DRAWING NO	RESTRICTED TO
A1	00779	C-5120793	

CUSTOMER DRAWING

SCALE	SHEET	OF	REV
4:1	1	1	B

4805 (3/11)