May.1.2023 Copyright 2023 HIROSE ELECTRIC CO., LTD. All Rights Reserved.
In case of consideration for using Automotive equipment / device which demand high reliability, kindly contact our sales window correspondents.

	COUNT	DESCRIPTION OF REVISIONS	BY	CHKD	DATE		COUNT	DESCRIPTION OF REVISIONS	BY	CHKD	DATE
△					. .	△					. .
△					. .	△					. .
△					. .	△					. .

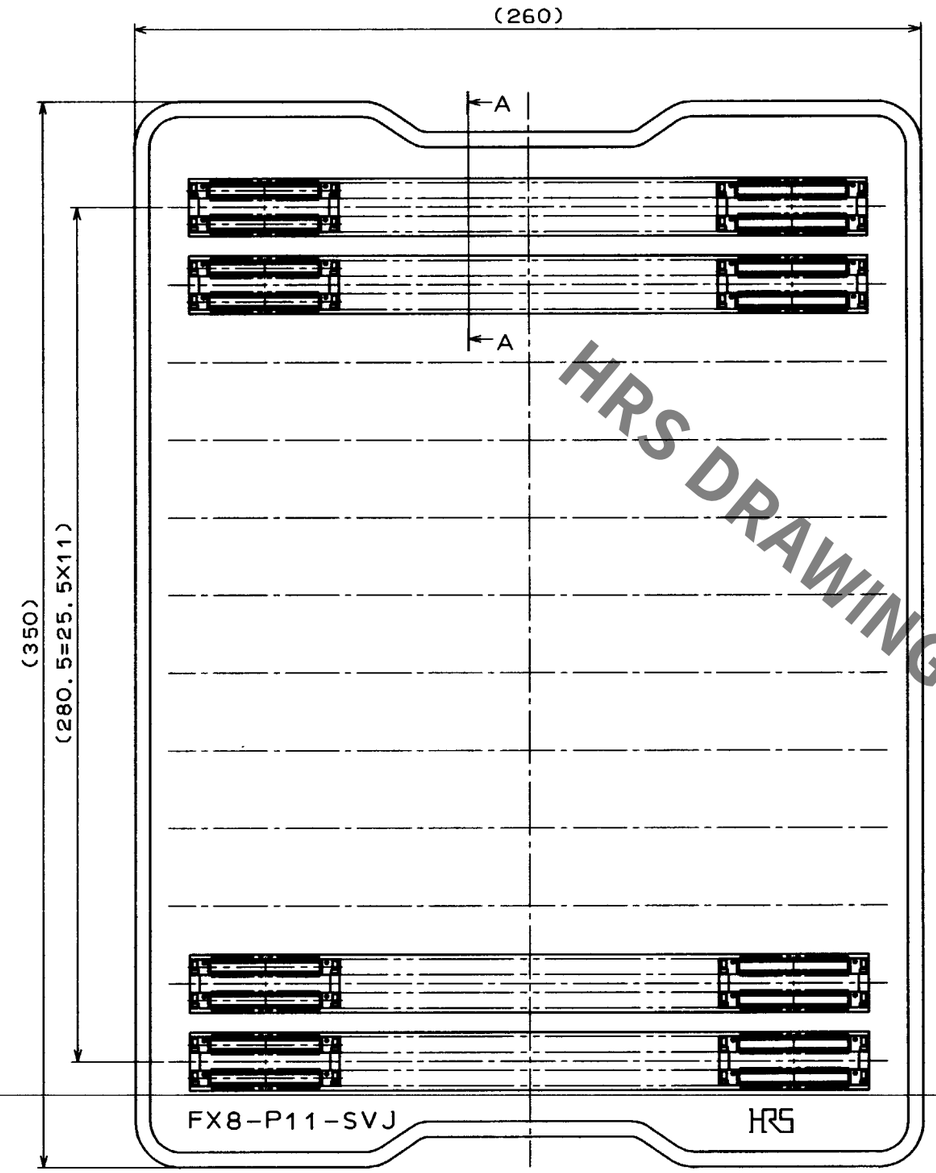

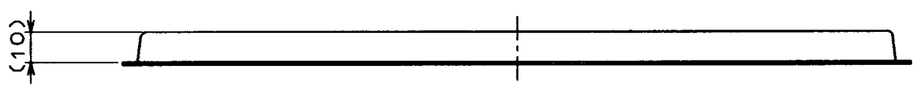

A-A (2:1)

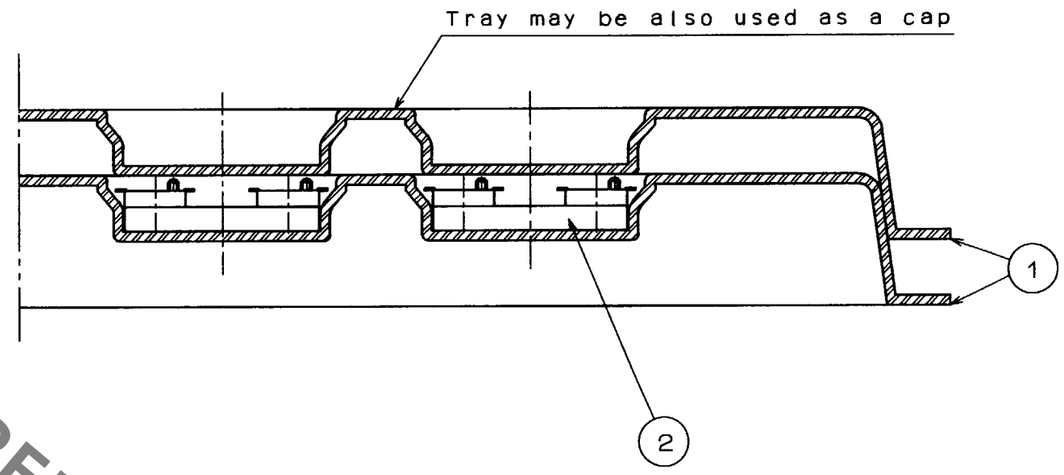

Packaging style(tray packaging)

Number of contact	60X2	80X2	90X2	100X2	120X2	140X2
Number of connector per tray	84	60	60	60	48	48

HRS DRAWING FOR REFERENCE

NO.	MATERIAL	FINISH , REMARKS	NO.	MATERIAL	FINISH , REMARKS
2	(CONNECTOR)		1	PS Resin	(TRAY)

CODE NO. (OLD)	DRAWN	DESIGNED	CHECKED	APPROVED	RELEASED
Drawing for Packaging	M. Ezaki '96.2.7	M. Ezaki '96.2.7	M. Tomita '96.2.7	J. Yoshimura '96.2.7	

SCALE	DRAWING NO.	PART NO.
1 : 2	EDC3-150728-03	FX8-**/**P11-SVJ
UNITS mm	HRS HIROSE ELECTRIC CO., LTD.	CODE NO. CL578 1/1

FORM No. 229

TO
*