TOP VIEW

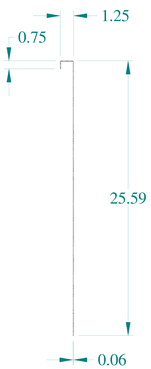

SIDE VIEW

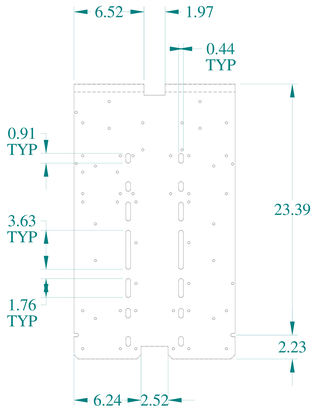

FRONT VIEW

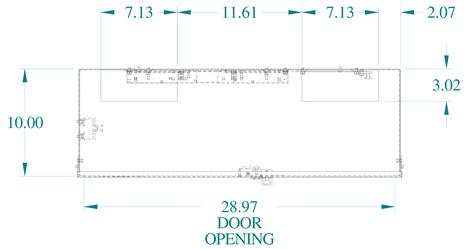

TOP VIEW

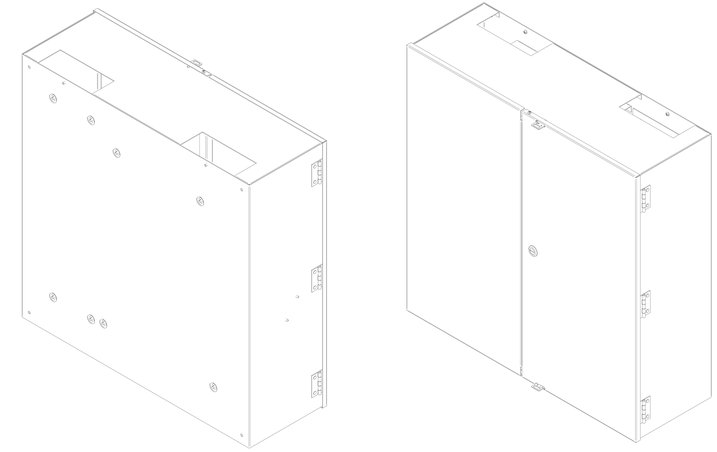

ISOMETRIC VIEWS

TOP VIEW

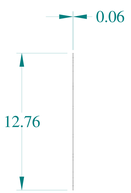

SIDE VIEW

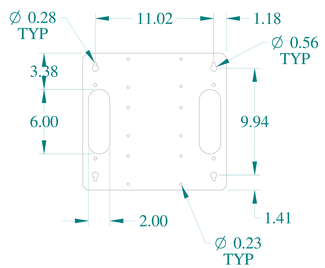

FRONT VIEW

SIDE VIEW

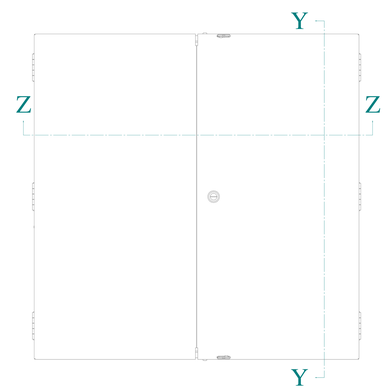

FRONT VIEW

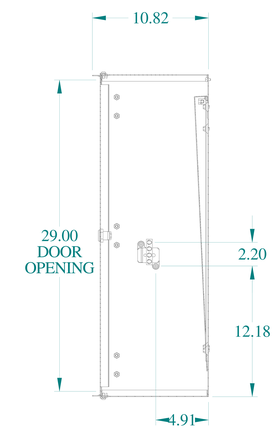

SECTION Y-Y

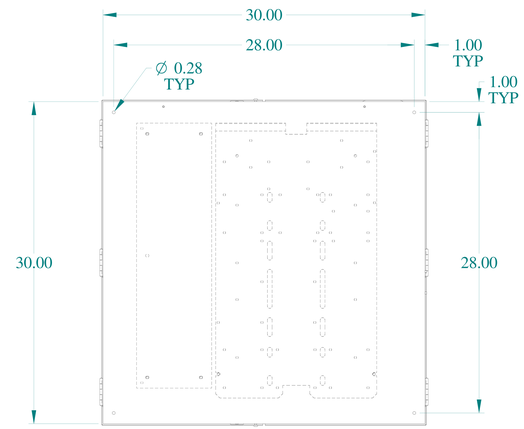

BACK VIEW

TOP VIEW

SIDE VIEW

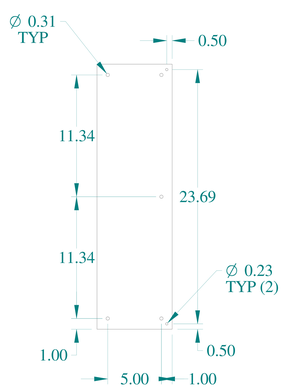

FRONT VIEW

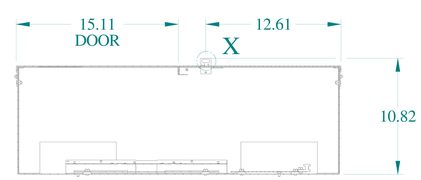

SECTION Z-Z

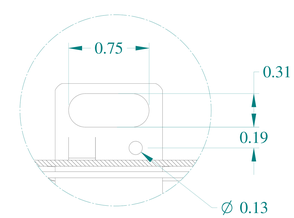

DETAIL X
TYP

HAMMOND MANUFACTURING®

www.hammondmfg.com

Data subject to change without notice.

Part # : CMCQ303010	Date : Mar. 23, 2019

Link:www.hammfg.com/CMCQ303010