CnC Tech, LLC Industrial Cable and Connector Technology	Engineer drawing	PART NO.	JLL-301 JLL-302 WIRE	SCALE	1：1
		DESCRIPTION	SVT#18*3C 60C	UNIT:	mm
		DWG No.	800-18-2-0-SVT0-BL-00200		

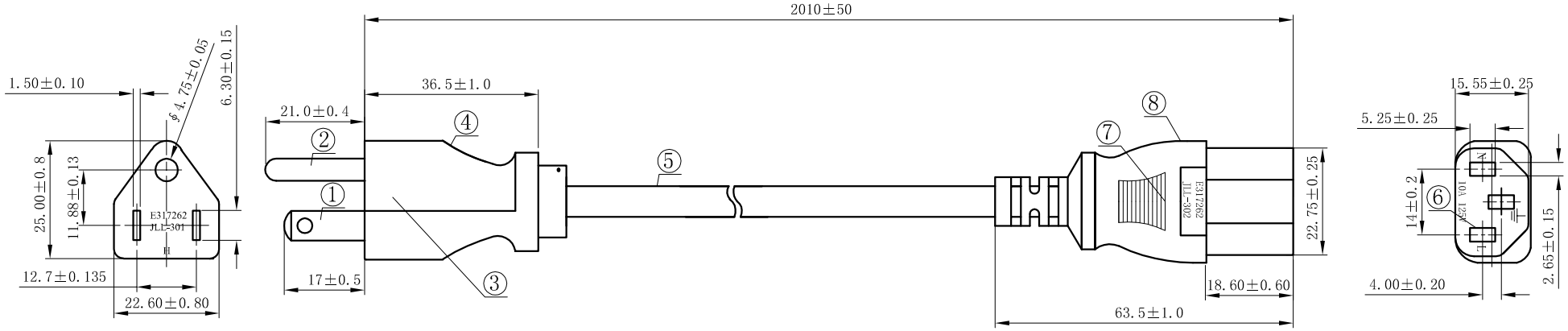

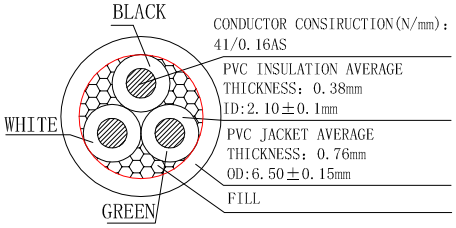

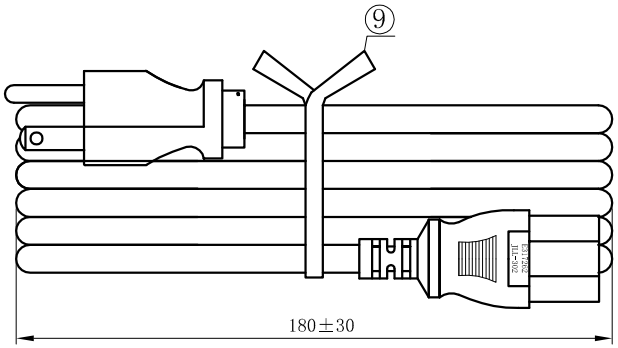

NOTES:

1) JACKET COLOR: BLACK
2). E-GREEN; L-BLACK ; N-WHITE

TESTING:

1) 100% OPEN & SHORT TESTING
2) INSULATION RESISTANCE:100M ohm(min)
3) VOLTAGE:DC500V/1min
4) ROHS COMPLIANT

NO.	`SPECIFICATION	COLOUR	MATERIAL	AMOUNT
①	Load terminals 98661	Silver	Cu	2P
②	Grounding terminal 97475	Silver	Cu	1P
③	Model aircraft 8661AN-3P	WHITE	PBT	1PCS
④	Plug JLL-301	BLACK	PVC Cu	1PCS
⑤	Wire SVT 18AWG/3C 60℃	BLACK	PVC Cu	1PCS
⑥	Play home terminal 98740	Silver	Cu	3P
⑦	Model aircraft 8745AND	WHITE	PBT	1PCS
⑧	Mother Play JLL-302	BLACK	PVC Cu	1PCS
⑨	Ties	BLACK		1PCS

Printing the contents of wire	The use of printing ink replenish Wire
E243711 (UL) SVT 3×18AWG(0.824mm²) VW-1 60℃ 300V CSA 228191 SVT 3×18AWG(0.824mm²) FT2 60℃ 300V -LF-	

REV	DATE	DESCRIPTION	SYMBOL

DRAWED/DATE	CHECKED/DATE
CAI/10.05.10	GONG/11.05.13