THIS DRAWING CONTAINS INFORMATION THAT IS PROPRIETARY TO J.S.T. AND SHALL NOT BE USED OR SHOWN WITHOUT WRITTEN PERMISSION.

ITEM	CONNECTOR PART NO.	DESCRIPTION	IPI CHECK	EOR CHECK
1	RASRSF-21-250A	RIGHT-ANGLE RSF CONTACT, BRASS		
2	UL1015, 20 AWG	BLACK		

Applicable Tooling

APPLICATOR

Applicable Housings

NO. OF CIRCUITS	KEYLESS HOUSING PART NO.	COVER PART NO.
2	RARSFP-2V-00	RARSFC-2V
3	RARSFP-3V-00	RARSFC-3V
4	RARSFP-4V-00	RARSFC-4V
5	RARSFP-5V-00	RARSFC-5V
6	RARSFP-6V-00	RARSFC-6V
7	RARSFP-7V-00	RARSFC-7V
8	RARSFP-8V-00	RARSFC-8V
9	RARSFP-9V-00	RARSFC-9V
10	RARSFP-10V-00	RARSFC-10V
11	RARSFP-11V-00	RARSFC-11V
12	RARSFP-12V-00	RARSFC-12V

Other housings and configurations are available. Please contact JST for details.

SUGGESTED MATING TAB

	WITHOUT STABILIZER	WITH STABILIZER
DIM. "A"	2.20 [0.087] MIN	4.20 ±0.15 [0.165 ±0.006]
DIM. "B"	7.40 [0.291] MIN	7.98 [0.314] MIN
DIM. "C"	5.90 [0.232] MAX	(7.6)

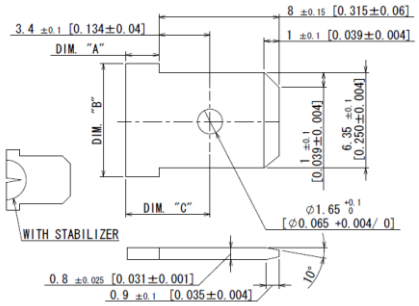

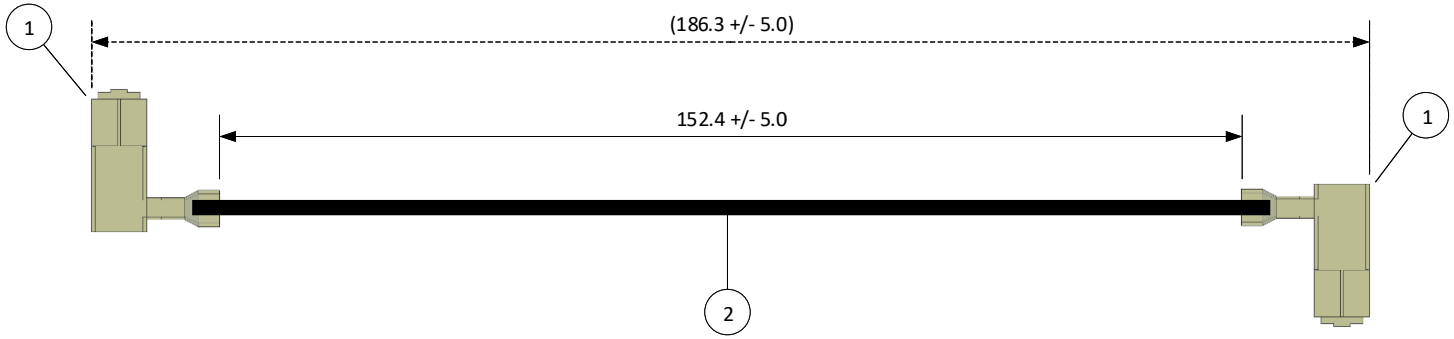

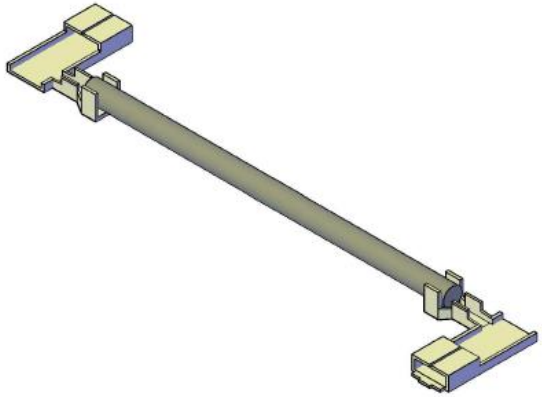

SCALE	CUSTOMER NAME	CUSTOMER PART NO.
1: 1		
DIMENSIONS: All dimensions are in MM with a tolerance of +/- 3.0 unless otherwise specified.	DESCRIPTION: 6" LIF, POS LOCK, .250, FLAG, DOUBLE-END LEADS, BRASS, F-F	
DRAWN BY: STEVEN PILKINGTON	ASSEMBLY PART NO.: ARASRSFRASRSF20K152A	
CHECKED BY: JUSTIN BAKER	DRAWING NO. & REVISION: GAM-158	REVISED: 3/16/2016

REV.	DESCRIPTION	DATE	BY