REVISIONS			
REV	DESCRIPTION	DATE	BY

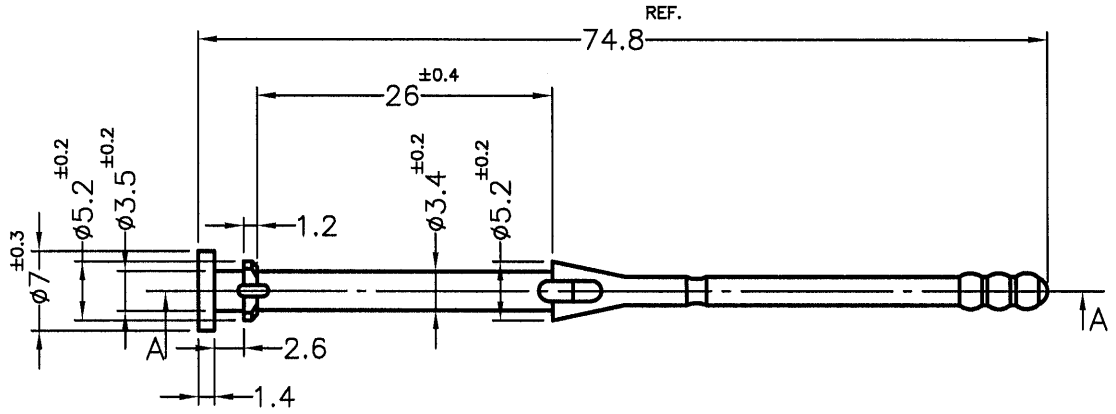

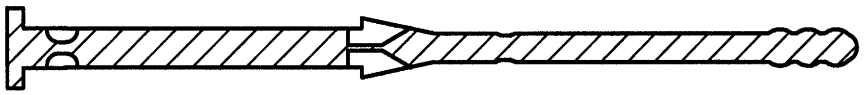

SECTION A–A

MOUNTING HOLE ø3.5

NOTE: PRODUCT COMPLIANT WITH LEAD AND RED PHOSPHORUS FREE.
產品符合無鉛及無紅磷

康揚企業股份有限公司
KANG YANG HARDWARE ENTERPRISE CO., LTD.
康揚塑膠(東莞)有限公司
KANG YANG PLASTIC(DONG GUAN)CO.,LTD.
康哲電腦配件(吳江)有限公司
KANG CHE COMPUTER COMPONENTS(WUJIANG) CO.,LTD.
ISO 9001
ISO 14001
QC 080000

TITLE FAN SNAP RIVET			SPEC. DWG.
MATERIAL TPE KY–134			DATE 2013.08.09
HARDNESS			DRAWN Y.C.P
COLOR BLACK			CHECK
UNLESS OTHERWISE SPECIFIED TOLERANCE SEE ABOVE			APPROVED Kang
PART NUMBER BUB-153G	DRAWING NUMBER BUB-153G		
SIZE A4	SCALE 3:2	UNIT mm	REV A