VIEW ON MATING SIDE

	1	2	3	4	5	6	7	8	9	10	11	12	13	14	15	16	17	18	19	20	21	22	23	24	25	26	27	28	29	30	31	32
c	A	A	A	A	A	A	A	A	A	A	A	A	A	A	A	A	A	A	A	A	A	A	A	A	A	A	A	A	A	A	A	A
b	A	A	A	A	A	A	A	A	A	A	A	A	A	A	A	A	A	A	A	A	A	A	A	A	A	A	A	A	A	A	A	A
a	A	A	A	A	A	A	A	A	A	A	A	A	A	A	A	A	A	A	A	A	A	A	A	A	A	A	A	A	A	A	A	A

A = 96 STANDARD CONTACTS L = 2.9

MARKING	STANDARD
PERFORMANCE LEVEL	G2/0 = CONTACT AREA PERFORM. LEVEL 2 / TERMINATION TIN
FLUX PROOF	NO
FIXING CLIP	YES
DIMENSIONS	SD-85013-0001 SHT 1

A	G2/0	a1-32 b1-32 c1-32
CONTACT SYMBOL	PERFORMANCE LEVEL	CONTACT POSITION NUMBER

EC NO. 1 2004-XXXX
DRWN: N.S 31/03/04
CH'K: G.L. 31/03/04
APPR: G.L. 31/03/04
DESCRIPTION
B
REV

QUALITY SYMBOLS
MAJOR =
CRITICAL (C) =

GENERAL TOLERANCES: (UNLESS SPECIFIED)

	mm	INCH
4 PLACES	±0.	±.
3 PLACES	±0.	±.
2 PLACES	±0.	±.
1 PLACE	±0.	±.
ANGULAR: ±		°

DRAFT WHERE APPLICABLE MUST REMAIN WITHIN DIMENSIONS

SCALE
DESIGN UNITS ☒mm ☐INCH
DRAWN BY & DATE N.S. 20/07/01
CHECKED BY & DATE G.L. 20/07/01
APPROVED BY & DATE G.L. 20/07/01
CAD FILENAME S850133122.S01

THIRD ANGLE PROJECTION

DIMENSIONS: ☐ mm/INCH ☐ INCH/mm ☒ mm ONLY
SHT REV
REVISE ON CAD ONLY

TITLE: 96 POS MALE CONNECTOR
ACCORDING DIN 41612 STYLE R
CONTACTS ARRANGEMENT

molex MOLEX INCORPORATED

MATERIAL NO. 85013-3122
DRAWING NO. SD-85013-3122
SHEET NO. 1 OF 1
SIZE D

THIS DRAWING CONTAINS INFORMATION THAT IS PROPRIETARY TO MOLEX INCORPORATED AND SHOULD NOT BE USED WITHOUT WRITTEN PERMISSION.

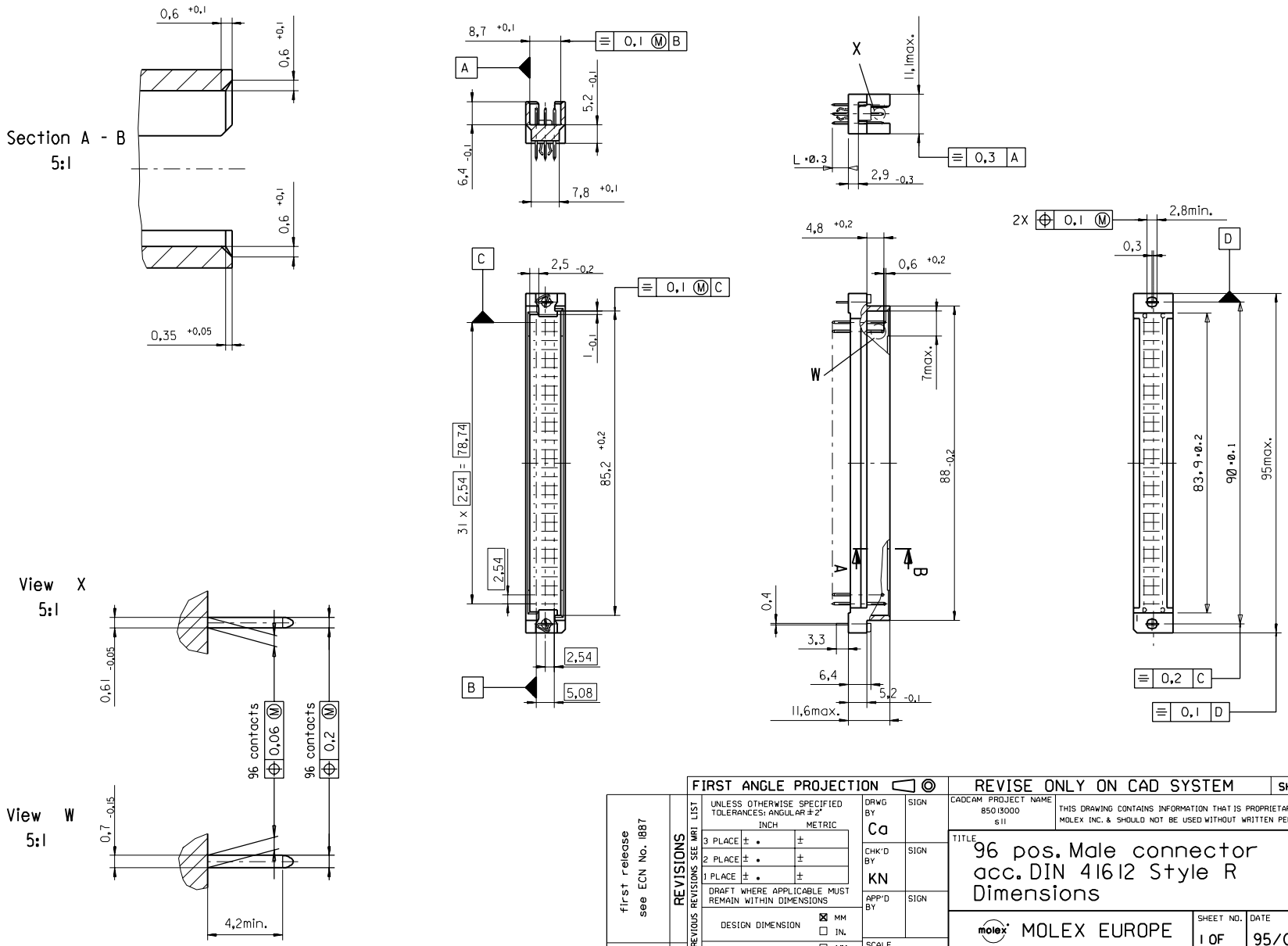

first release see ECN No. 1887	REVISIONS	FIRST ANGLE PROJECTION	DRWG BY Ca	SIGN	REVISE ONLY ON CAD SYSTEM — SH. REV.
		UNLESS OTHERWISE SPECIFIED TOLERANCES: ANGULAR ±2° INCH / METRIC: 3 PLACE ± . ±; 2 PLACE ± . ±; 1 PLACE ± . ±	CHK'D BY KN	SIGN	CADCAM PROJECT NAME 85013000 s11
		DRAFT WHERE APPLICABLE MUST REMAIN WITHIN DIMENSIONS	APP'D BY	SIGN	THIS DRAWING CONTAINS INFORMATION THAT IS PROPRIETARY TO MOLEX INC. & SHOULD NOT BE USED WITHOUT WRITTEN PERMISSION
		DESIGN DIMENSION ☒ MM ☐ IN.	SCALE 1:1		TITLE 96 pos. Male connector acc. DIN 41612 Style R Dimensions
A	LTR FOR PREVIOUS REVISIONS SEE MRI LIST	EQUIVALENT DIMENSION ☐ MM ☐ IN.			molex MOLEX EUROPE — SHEET NO. 1 OF — DATE 95/06/07
		IF TWO DIMENSIONS ARE SHOWN THE UPPER IS THE DESIGN DIMENSION, LOWER IS SECONDARY			PART NO. — DWG NO. SDA-85013-0001 — SIZE B

7132-1283

VIEW ON MATING SIDE

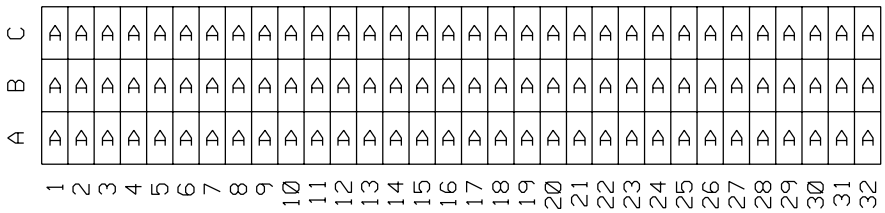

A = 96 STANDARD CONTACTS L=2,9

Marking	Standard
Performance level	G2/0 = Contact area perform. level 2 / Termination tin
Flux proof	no
Fixing clip	yes
Dimensions	SDA-85013-0001 sht.1
Technical Data	PS-85013-0001

A	G2/0	a1-32 b1-32 c1-32
Contact symbol	Perform. level	Contact position number

LTR	REVISIONS	FOR PREVIOUS REVISIONS SEE MRI LIST
A	first release see ECN No. 2428	

UNLESS OTHERWISE SPECIFIED TOLERANCES: ANGULAR ±2°

	INCH	METRIC
3 PLACE	± .	±
2 PLACE	± .	±
1 PLACE	± .	±

DRAFT WHERE APPLICABLE MUST REMAIN WITHIN DIMENSIONS

DESIGN DIMENSION ☐ MM ☐ IN.

EQUIVALENT DIMENSION ☐ MM ☐ IN.

IF TWO DIMENSIONS ARE SHOWN THE UPPER IS THE DESIGN DIMENSION, LOWER IS SECONDARY

DRWG BY	Ca	SIGN
CHK'D BY	KN	SIGN
APP'D BY	JB	SIGN
SCALE		

REVISE ONLY ON CAD SYSTEM | SH. | REV.

CADCAM PROJECT NAME s8501331 s21

THIS DRAWING CONTAINS INFORMATION THAT IS PROPRIETARY TO MOLEX INC. & SHOULD NOT BE USED WITHOUT WRITTEN PERMISSION

TITLE

96 pos. Male connector acc. DIN 41612 style R contacts arrangement

MOLEX EUROPE

SHEET NO. 1 OF 1

DATE 97/03/03

PART NO. 85013-3122

DWG NO. SDA-85013-3122

SIZE A