THIS DRAWING IS UNPUBLISHED. RELEASED FOR PUBLICATION -,- .
© COPYRIGHT 2011 BY TYCO ELECTRONICS CORPORATION. ALL RIGHTS RESERVED.

LOC DW | DIST —

REVISIONS

| P | LTR | DESCRIPTION | DATE | DWN | APVD |
|---|---|---|---|---|---|
| | 02 | REVISED (ECR-12-014986) REACTIVE 1-734715-2 & DRAWING REDRAW | 27AUG'12 | E.L. | W.K. |

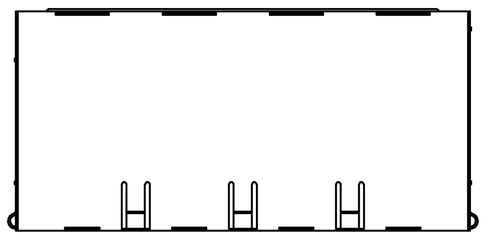

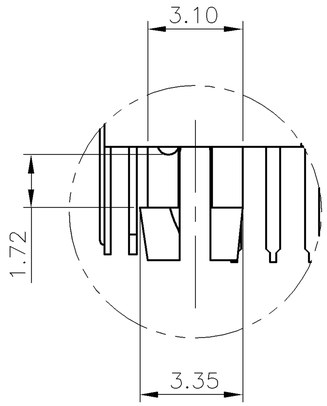


DETAIL Z
SCALE 4:1

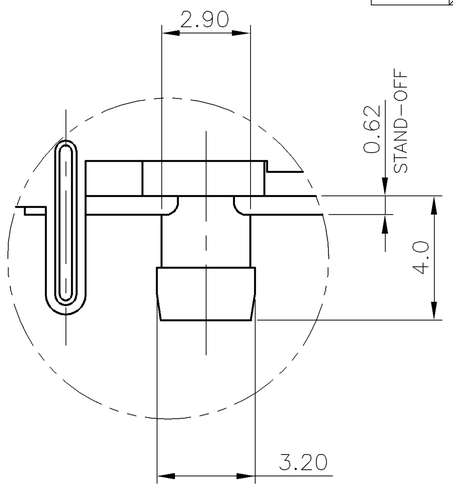


DETAIL Y
SCALE 4:1

NOTE:

1. MATERIAL:
   1.1 HOUSING & COVER: PA46, WITH 30% GF, UL94V-0, COLOR: BLACK.
   1.2 INSERT HOUSING: PBT, WITH 30% GF, UL94V-0, COLOR: BLACK.
   1.3 CONTACTS: PHOSPHOR BRONZE.
   1.4 SHELL & INNER SHELL: BRASS.
2. FINISH:
   2.1 CONTACTS: (SEE TABLE) GOLD PLATED ON CONTACT AREA.
   GOLD FLASH ON SOLDER TAIL.
   1.27um [50u"] MIN. NICKEL UNDERPLATED OVERALL.
   2.2 SHELL: 0.508um [20u"] MIN. NICKEL PLATED OVERALL.
3. REFLOW SOLDER CAPABLE TO 260°C PER TE CONNECTIVITY SPEC 109-201, CONDITION B.

4. OBSOLETE PARTS: OBSOLETE CIS STREAMLINING PER D.RENAUD/D.SINISI

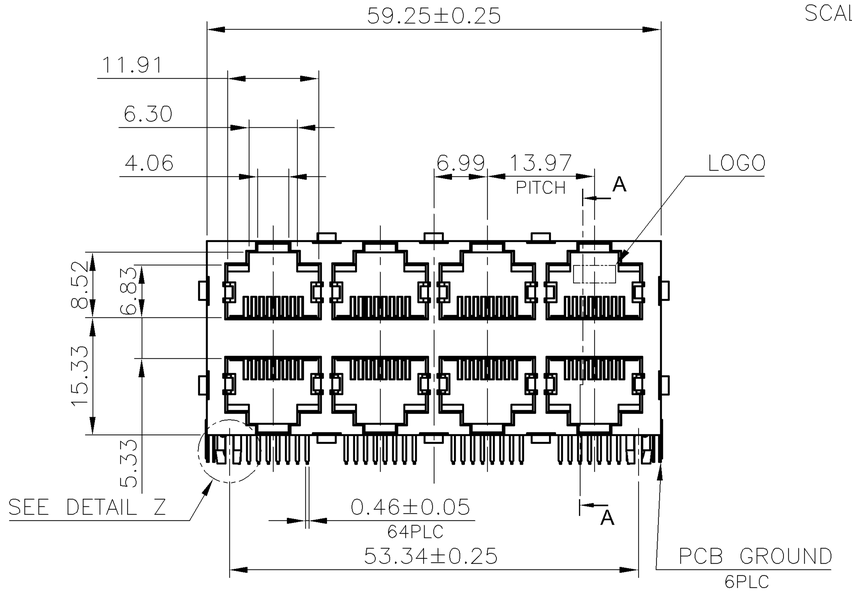


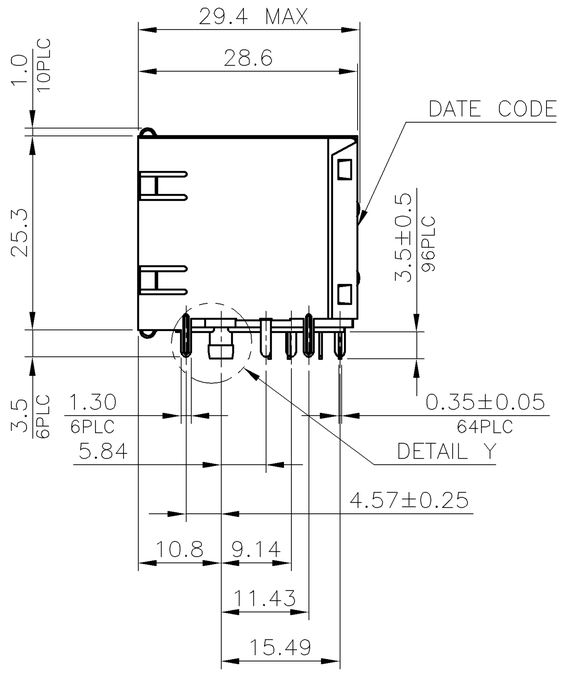


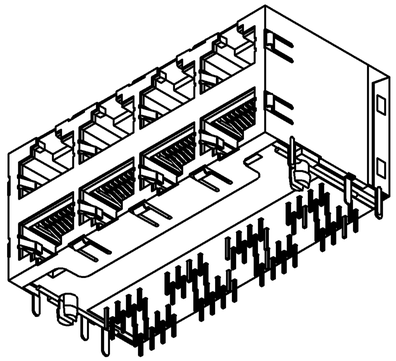

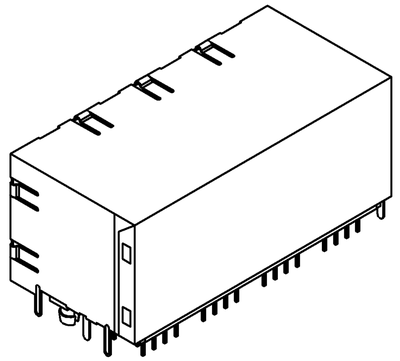

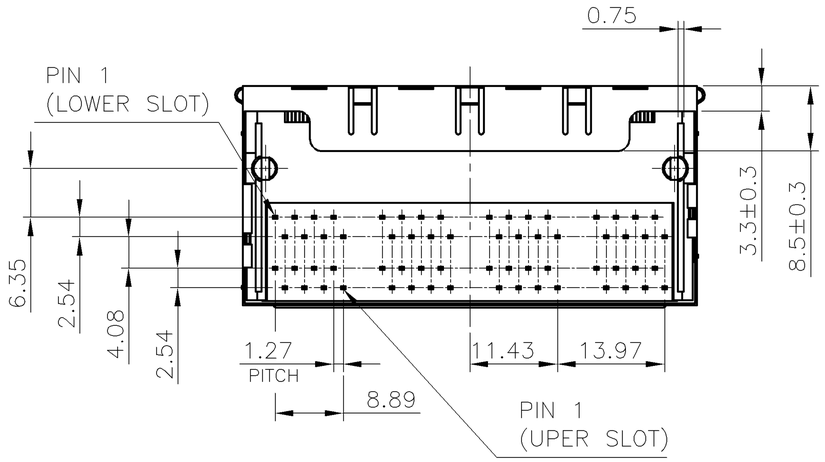


| | | | |
|---|---|---|---|
| 4 OBSOLETE | TRAY | 1.27um[50u"] | ~~1-1734715-4~~ |
| | | 0.762um[30u"] | ~~1-1734715-3~~ |
| | | 0.381um[15u"] | 1-1734715-2 |
| | | 0.152um[6u"] | ~~1-1734715-1~~ |
| 4 OBSOLETE | TUBE | 1.27um[50u"] | ~~1734715-4~~ |
| | | 0.762um[30u"] | ~~1734715-3~~ |
| | | 0.381um[15u"] | 1734715-2 |
| 4 OBSOLETE | | 0.152um[6u"] | ~~1734715-1~~ |
| | PACKAGE | MIN. GOLD THICKNESS | PART NUMBER |

THIS DRAWING IS A CONTROLLED DOCUMENT.

DIMENSIONS: mm

TOLERANCES UNLESS OTHERWISE SPECIFIED:

| | |
|---|---|
| 0 PLC | ± – |
| 1 PLC | ± 0.3 |
| 2 PLC | ± 0.2 |
| 3 PLC | ± 0.15 |
| 4 PLC | ± – |
| ANGLES | ± 3° |

MATERIAL: SEE NOTE

FINISH: SEE NOTE

DWN O. HU 04MAY2005
CHK S. HOU 04MAY2005
APVD W.J. KE 04MAY2005
PRODUCT SPEC 108-57136
APPLICATION SPEC —
WEIGHT 47.71 GRAMS
CUSTOMER DRAWING

TE Connectivity

NAME
MODULAR JACK CONNECTOR
MULTI-PORT, RJ45, 2X4
SHIELDED, THRU-HOLE, PANEL GROUND

| SIZE | CAGE CODE | DRAWING NO | RESTRICTED TO |
|---|---|---|---|
| A3 | 00779 | C-1734715 | — |

SCALE — | SHEET 1 OF 4 | REV 02

1470-19 (1/08)

THIS DRAWING IS UNPUBLISHED. RELEASED FOR PUBLICATION -,- .
© COPYRIGHT 2011 BY TYCO ELECTRONICS CORPORATION. ALL RIGHTS RESERVED.

| LOC | DIST |
|---|---|
| DW | — |

REVISIONS

| P | LTR | DESCRIPTION | DATE | DWN | APVD |
|---|---|---|---|---|---|
| | | SEE SHEET 1. | | | |

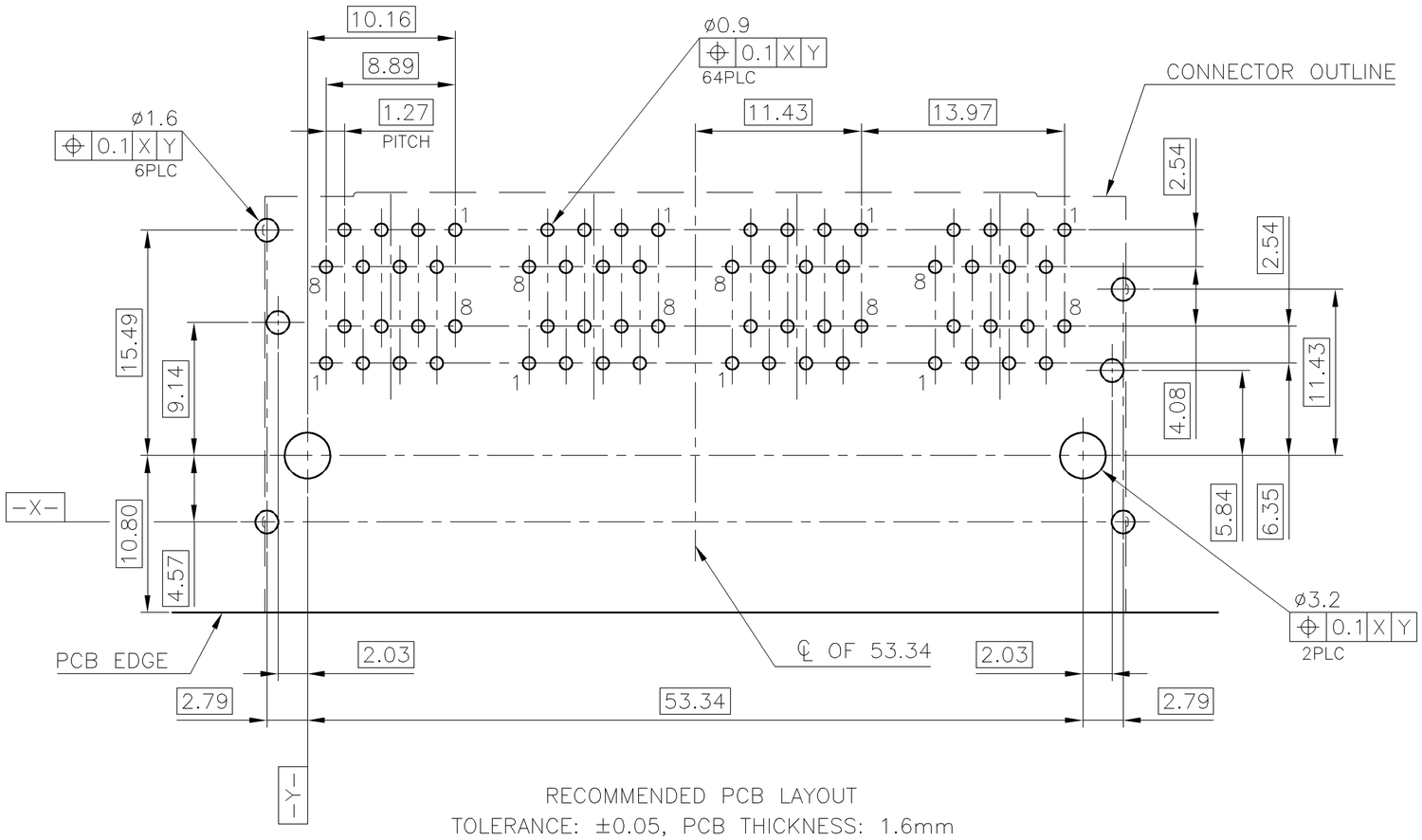


RECOMMENDED PCB LAYOUT
TOLERANCE: ±0.05, PCB THICKNESS: 1.6mm

THIS DRAWING IS A CONTROLLED DOCUMENT.

DIMENSIONS: mm

TOLERANCES UNLESS OTHERWISE SPECIFIED:

| | |
|---|---|
| 0 PLC | ± – |
| 1 PLC | ± 0.3 |
| 2 PLC | ± 0.2 |
| 3 PLC | ± 0.15 |
| 4 PLC | ± – |
| ANGLES | ± 3° |

MATERIAL –

FINISH –

DWN –
CHK –
APVD –
PRODUCT SPEC –
APPLICATION SPEC –
WEIGHT –

TE Connectivity

NAME
MODULAR JACK CONNECTOR
MULTI-PORT, RJ45, 2X4
SHIELDED, THRU-HOLE, PANEL GROUND

| SIZE | CAGE CODE | DRAWING NO | RESTRICTED TO |
|---|---|---|---|
| A3 | 00779 | C-1734715 | — |

CUSTOMER DRAWING | SCALE — | SHEET 2 OF 4 | REV 02

1470-19 (1/08)

THIS DRAWING IS UNPUBLISHED. RELEASED FOR PUBLICATION – , – .
© COPYRIGHT 2011 BY TYCO ELECTRONICS CORPORATION. ALL RIGHTS RESERVED.

| LOC | DIST |
|---|---|
| DW | – |

REVISIONS

| P | LTR | DESCRIPTION | DATE | DWN | APVD |
|---|---|---|---|---|---|
| | | SEE SHEET 1. | | | |

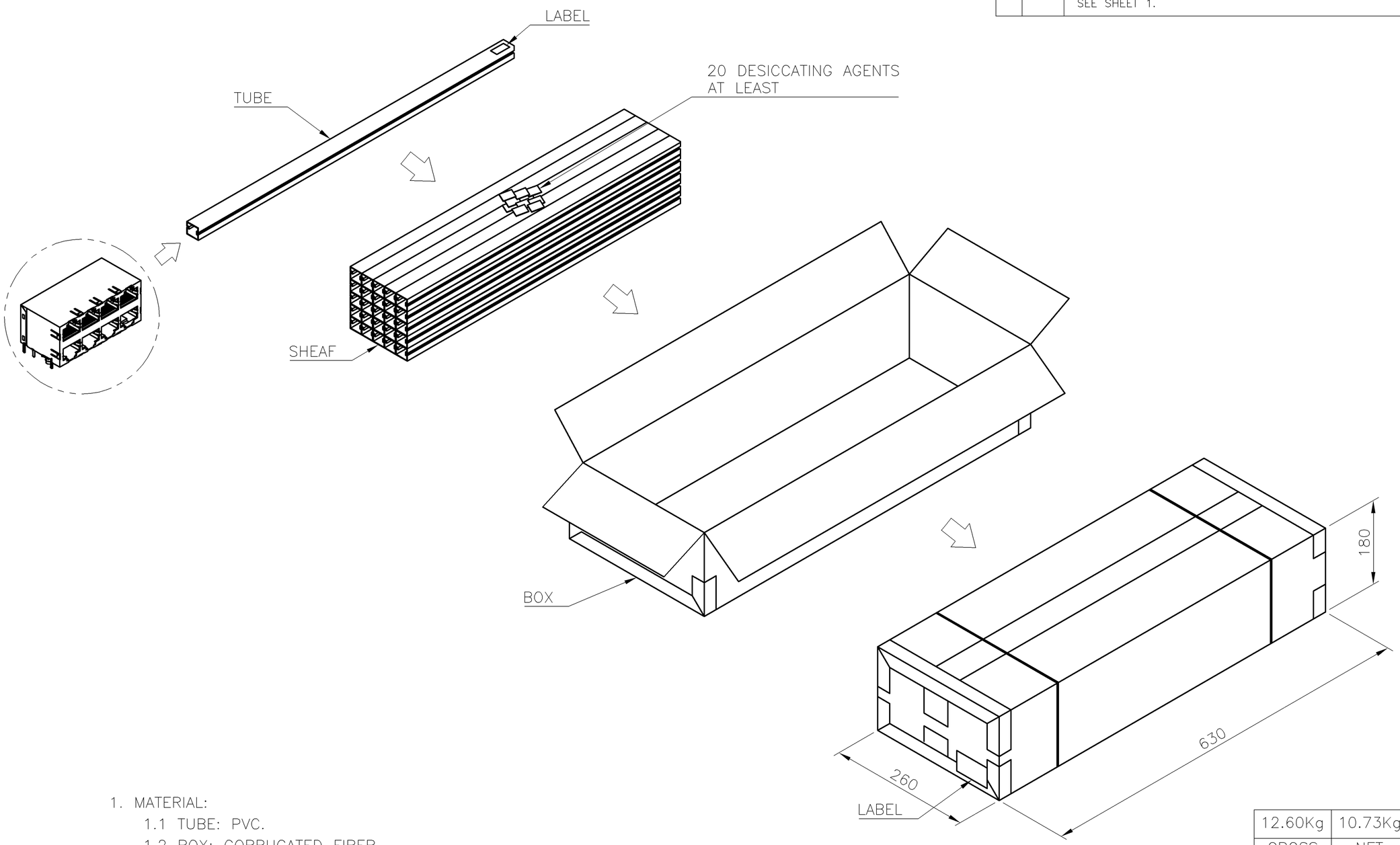


1. MATERIAL:
   1.1 TUBE: PVC.
   1.2 BOX: CORRUGATED FIBER.
2. DIMENSION: SEE DRAWING
3. QUANTITY: SEE TABLE
4. WEIGHT: SEE TABLE
5. EACH BAG SHALL BE INCLUDED:
   * DESICCANT

| GROSS WEIGHT | NET WEIGHT | PCS/ TUBE | TUBE/ BOX | PCS/ BOX |
|---|---|---|---|---|
| 12.60Kg | 10.73Kg | 9 | 25 | 225 |

THIS DRAWING IS A CONTROLLED DOCUMENT.

DIMENSIONS: mm

TOLERANCES UNLESS OTHERWISE SPECIFIED:

| | |
|---|---|
| 0 PLC | ± – |
| 1 PLC | ± 0.3 |
| 2 PLC | ± 0.2 |
| 3 PLC | ± 0.15 |
| 4 PLC | ± – |
| ANGLES | ± 3° |

MATERIAL –

FINISH –

DWN –
CHK –
APVD –
PRODUCT SPEC –
APPLICATION SPEC –
WEIGHT –

TE Connectivity

NAME
MODULAR JACK CONNECTOR
MULTI–PORT, RJ45, 2X4
SHIELDED, THRU–HOLE, PANEL GROUND

| SIZE | CAGE CODE | DRAWING NO | RESTRICTED TO |
|---|---|---|---|
| A3 | 00779 | C–1734715 | – |

CUSTOMER DRAWING | SCALE – | SHEET 3 OF 4 | REV 02

THIS DRAWING IS UNPUBLISHED. RELEASED FOR PUBLICATION – , – .
© COPYRIGHT 2011 BY TYCO ELECTRONICS CORPORATION. ALL RIGHTS RESERVED.

| LOC | DIST |
|---|---|
| DW | — |

REVISIONS

| P | LTR | DESCRIPTION | DATE | DWN | APVD |
|---|---|---|---|---|---|
| | | SEE SHEET 1. | | | |

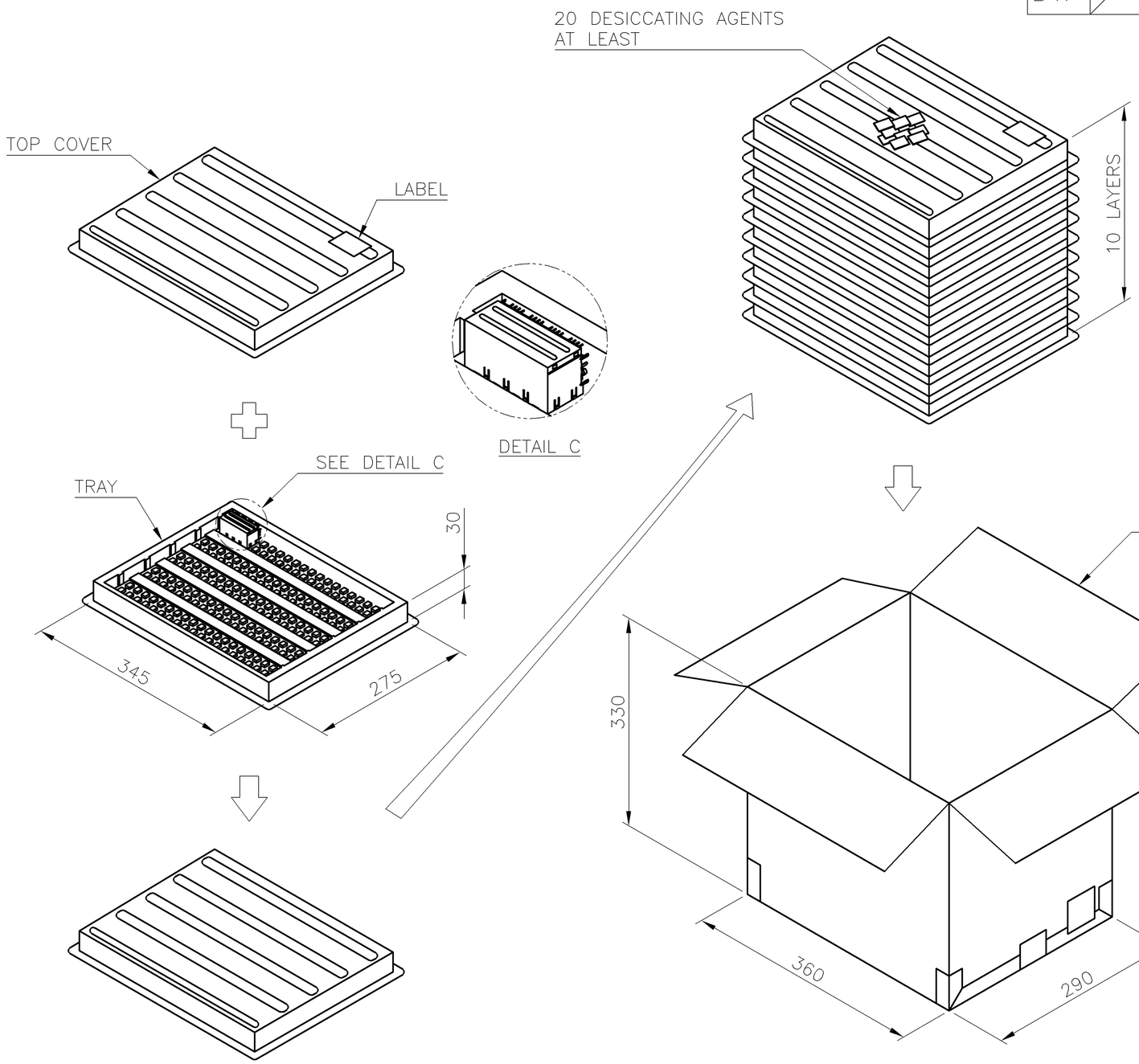


1. MATERIAL:
   1.1 TRAY: PVC.
   1.2 BOX: CORRUGATED FIBER.
2. DIMENSION: SEE DRAWING
3. QUANTITY: SEE TABLE
4. WEIGHT: SEE TABLE
5. EACH BAG SHALL BE INCLUDED:
   * DESICCANT

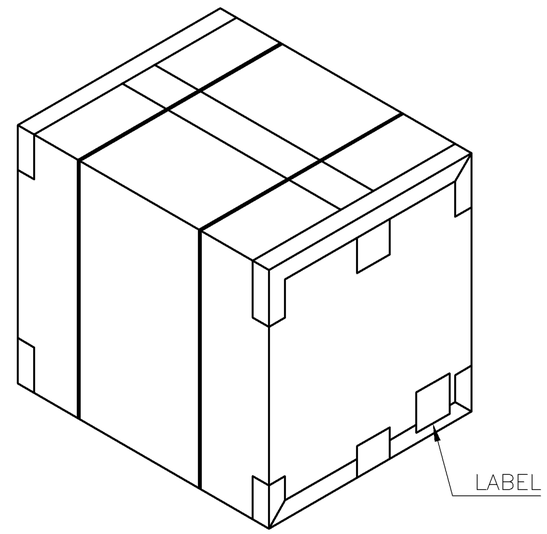


| GROSS WEIGHT | NET WEIGHT | PCS/ TRAY | TRAY/ BOX | PCS/ BOX |
|---|---|---|---|---|
| 10.50Kg | 9.54Kg | 20 | 10 | 200 |

THIS DRAWING IS A CONTROLLED DOCUMENT.

DIMENSIONS: mm

TOLERANCES UNLESS OTHERWISE SPECIFIED:

| | |
|---|---|
| 0 PLC | ± – |
| 1 PLC | ± 0.3 |
| 2 PLC | ± 0.2 |
| 3 PLC | ± 0.15 |
| 4 PLC | ± – |
| ANGLES | ± 3° |

MATERIAL –

FINISH –

DWN –
CHK –
APVD –
PRODUCT SPEC –
APPLICATION SPEC –
WEIGHT –

NAME

MODULAR JACK CONNECTOR
MULTI–PORT, RJ45, 2X4
SHIELDED, THRU–HOLE, PANEL GROUND

| SIZE | CAGE CODE | DRAWING NO | RESTRICTED TO |
|---|---|---|---|
| A3 | 00779 | C–1734715 | — |

CUSTOMER DRAWING | SCALE — | SHEET 4 OF 4 | REV 02