Materials
1. Insulator: PBT + 15% glass fiber, black
2. Terminal: C5191 phosphor bronze, 2 µm nickel plated
3. Shell: C3604 brass, 2 µm nickel plated

Electrical Requirements
Dielectric strength: 1 min @ 500 Vac
Insulation resistance: 100 MΩ @ 500 Vdc
Contact resistance: 30 mΩ maximum

Mechanical Requirements
Insertion force: 0.3-3 kgf
Withdrawal force: 0.3-3 kgf
Life cycle: 5000 mating cycles while maintaining 0.3-2.0 kgf min. insertion force, 0.2-1.5 kgf min. withdrawal force and less than 100 mΩ contact resistance.

Environmental Requirements
Heat test: 70 °C, relative humidity 70-85% for 96 hours while maintaining contact resistance: 100 mΩ maximum, insulation resistance: 50 MΩ minimum, without looseness or deformation
Humidity test: 40 °C, relative humidity 90-100% for 96 hours, while maintaining dielectric strength: 1 min @ 500 Vac, insulation resistance: 50 MΩ @ 500 Vdc, contact resistance: 100 mΩ maximum
Salt spray test: 35±2 °C, relative humidity 90-95%, 5% NaCl mist for 24 hrs. Wash parts after test. Maintain mechanical requirements and a contact resistance of less than 80 mΩ.

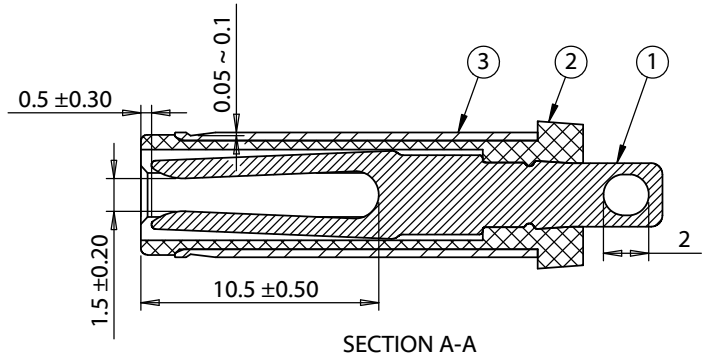

SECTION A-A

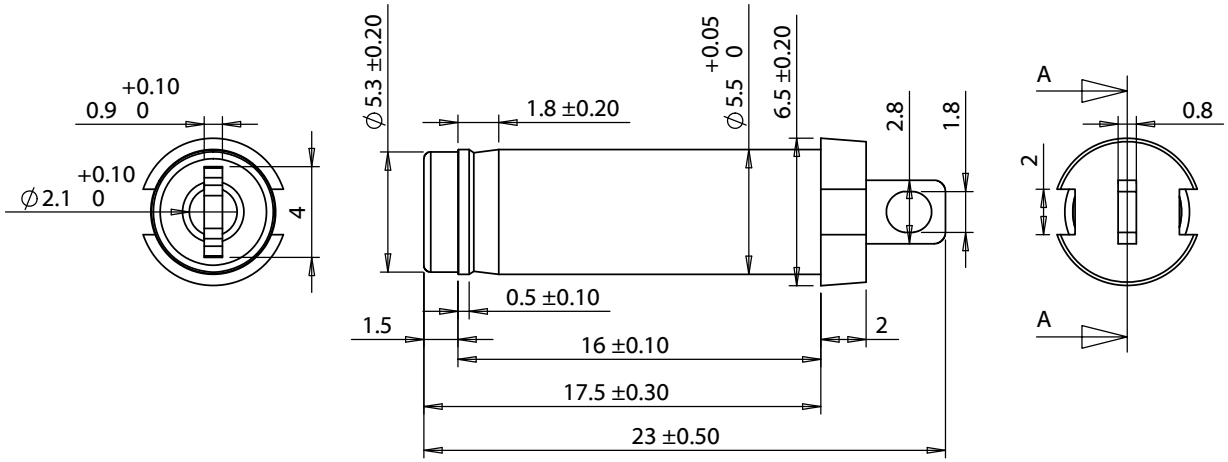

Revision:	Date:	Description:
A	09/02/2009	Initial release
A1	11/09/2012	Added test data
A2	12/29/2015	Modified tolerances

Prepared: GL Digitally signed by GL Date: 2019.01.25 09:38:52 -08'00'

Verified: AG Digitally signed by AG Date: 2019.03.06 08:48:03 -08'00'

Dimensions are in millimeters.
Tolerances:
X: ± 0.3 mm
X.X: ± 0.1 mm
X.XX: ± 0.05 mm

Notes:
RoHS compliant
Function test: no open, no short circuit, no intermittent

Description:
Connector, dc plug, 5.5x2.1xL23 mm, molding style, spring contacts

TENSILITY
tel 1.541.323.3228 800 877.670.7118
fax 1.541.323.4202 web tensility.com

Size: A
Part number: 50-00024
Scale: 3:1
Sheet 1 of 2

5 4 3 2 1

Ratings
Maximum Operating Voltage: 48 Vdc
Maximum Operating Current: 6.5 A

Operating Temperature Range
-25° to 70 °C, relative humidity of 85% or less

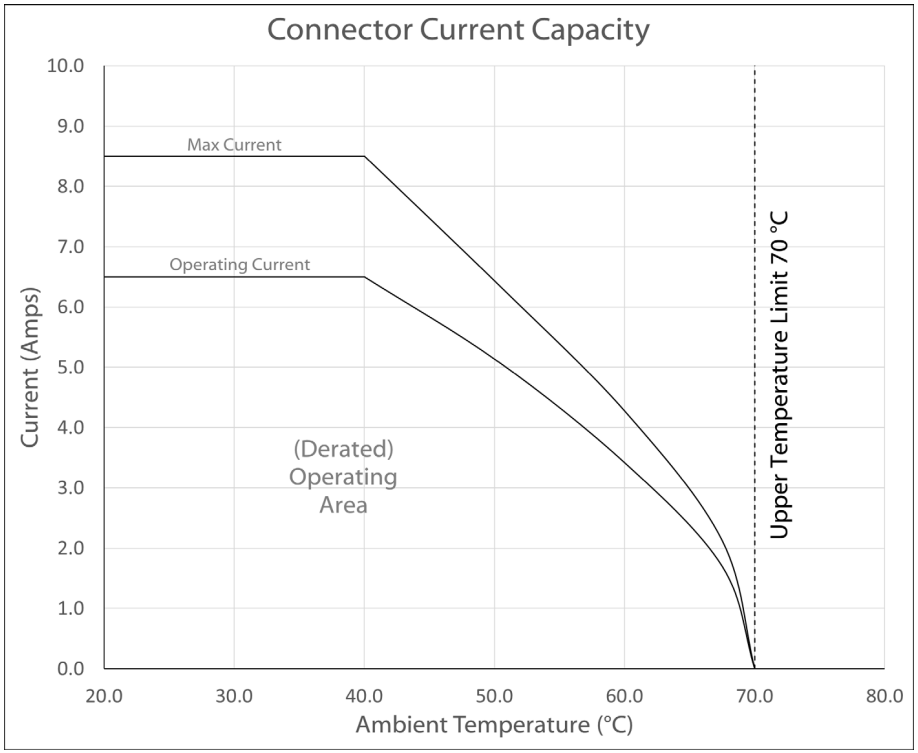

Testing based on IEC 60512-5-2. Max current curve generated with isolated test article under controlled environmental conditions, and does not take into account external factors such as housings,mating cables, or other circuitry. Operating current curve (derated by 20% of maximum values) accounts for external factors, and manufacturing variation.

Revision:	Date:	Description:
A	09/02/2009	Initial release
A1	11/09/2012	Added test data
A2	12/29/2015	Modified tolerances

Prepared: GL Digitally signed by GL Date: 2019.01.25 09:39:26 -08'00'

Verified: AG Digitally signed by AG Date: 2019.03.06 08:48:15 -08'00'

Dimensions are in millimeters.
Tolerances:
X: ± 0.3 mm
X.X: ± 0.1 mm
X.XX: ± 0.05 mm

Notes:
RoHS compliant
Function test: no open, no short circuit, no intermittent

Description:
Connector, dc plug, 5.5x2.1xL23 mm, molding style, spring contacts

TENSILITY
tel 1.541.323.3228 800 877.670.7118
fax 1.541.323.4202 web tensility.com

Size: A
Part number: 50-00024
Scale: 3:1
Sheet 2 of 2

5 4 3 2 1