THIS DOCUMENT IS THE PROPERTY OF KEYSTONE ELECTRONICS CORP. AND SHALL NOT BE REPRODUCED, DISTRIBUTED OR USED AS A BASIS FOR MANUFACTURE WITHOUT PRIOR WRITTEN PERMISSION FROM KEYSTONE ELECTRONICS CORP.

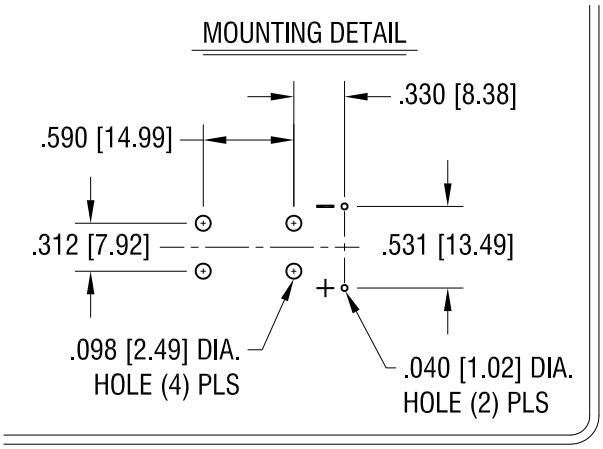

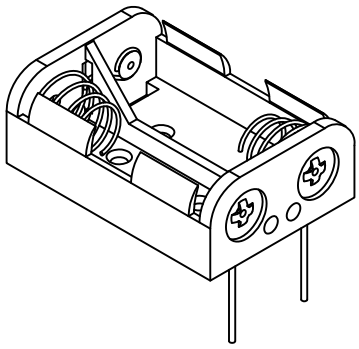

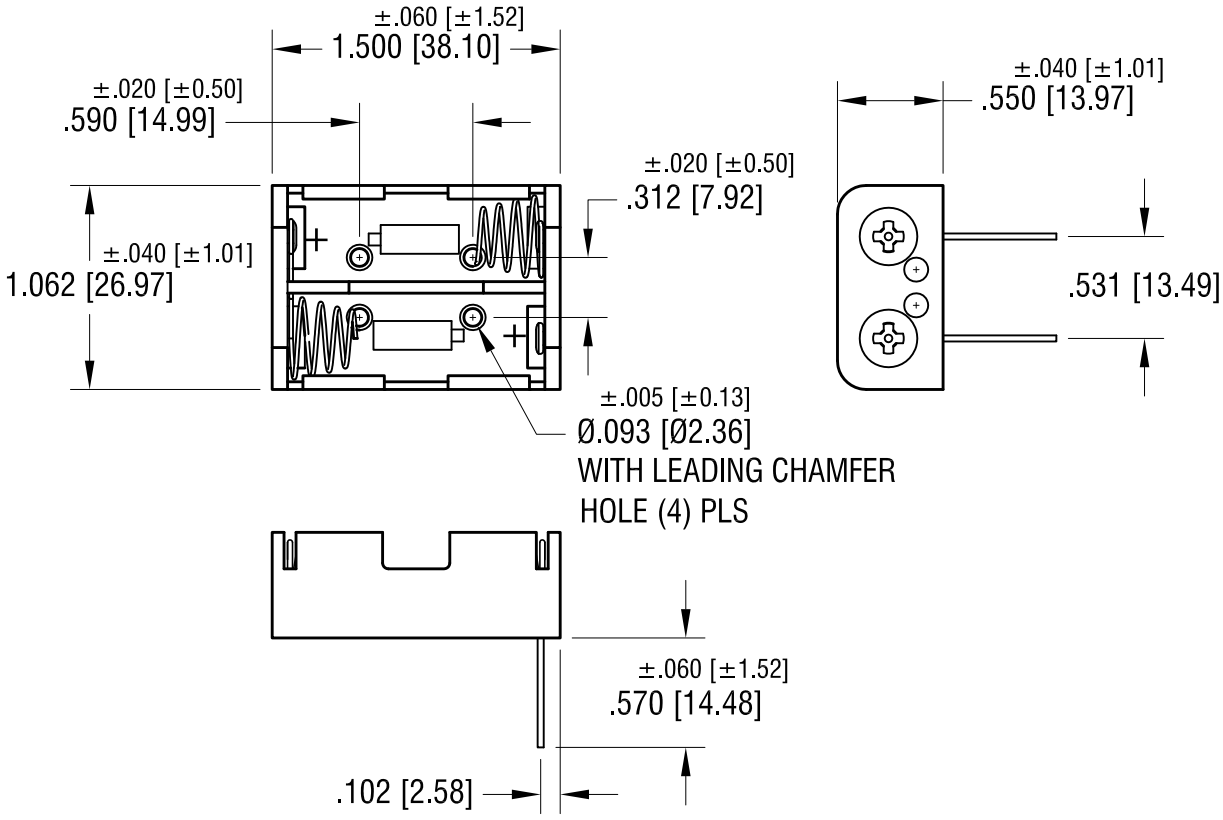

NOTE:

1. HOLDER: MAT'L: POLYPROPYLENE
2. SPRING: MAT'L: MUSIC WIRE, .020 [0.50] DIA.
3. PC TERMINALS: MAT'L: BRASS, .032 [0.81] DIA.

DATE	DESCRIPTION	REV.
6.12.09	CHANGE AS PER ECN 09–067	C
4.3.03	CHANGE AS PER ECN 03–027	B
11.8.99	CHANGE AS PER ECN 99–080	A

KEYSTONE ELECTRONICS CORP.

www.keyelco.com • NEW HYDE PARK, NY 11040 • Tel (516) 328-7500

PART NAME	PC BATTERY HOLDER (2) 'N'		
MATERIAL	AS NOTED		
FINISH	NICKEL PLATE	DRN BY BOONE	DATE 10.11.95
		APP'D LN	SCALE 1X
TOLERANCES INCH [MM] DECIMAL ± .015 [± 0.38] ANGULAR ± 1° UNLESS OTHERWISE SPECIFIED	CODE C	DWG NO. 2472	