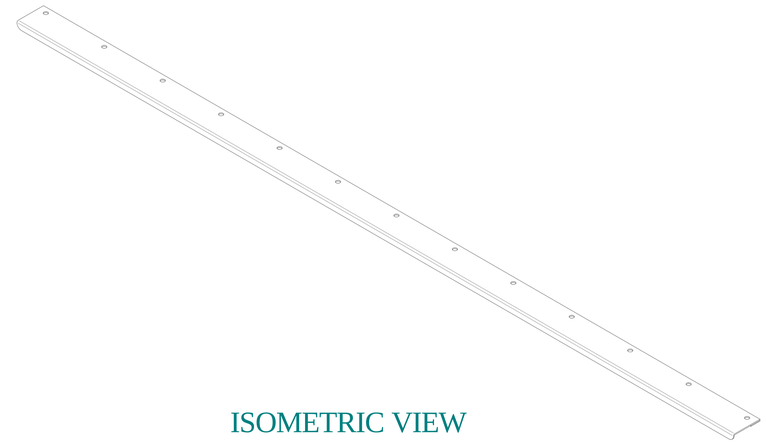

ISOMETRIC VIEW

TOP VIEW

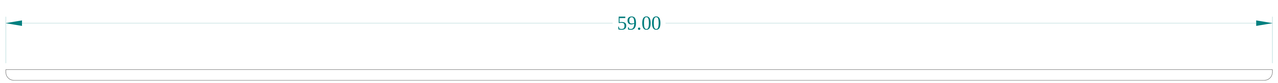

FRONT VIEW

SIDE VIEW

HAMMOND MANUFACTURING®

www.hammondmfg.com

Data subject to change without notice.

Part # : 1481S60K	Date : Jul 5, 2021

Link:www.hammfg.com/1481S60K