| PART NUMBER | A (Overall Depth) | B (Useable Depth) | C (Top/Btm U Usable) |
|---|---|---|---|
| HWMR1932U | 18.0" - 24.0" | 15.1" - 21.1" | 12.4" - 18.4" |

NOTE: DEPTH IS FULLY ADJUSTABLE WITHIN RANGE

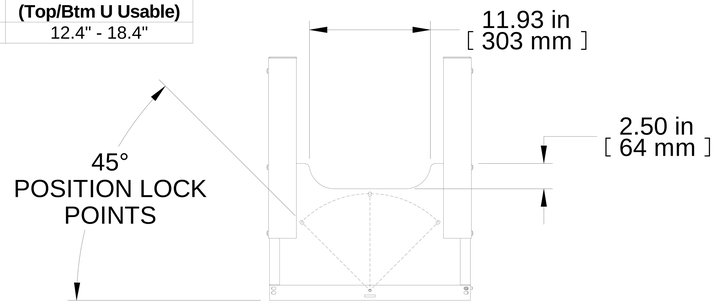


TOP VIEW

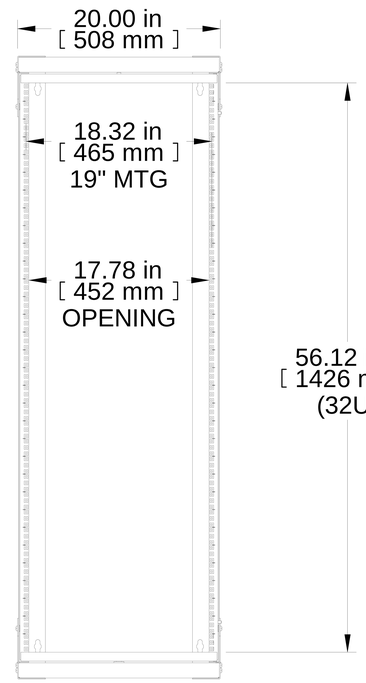


FRONT VIEW

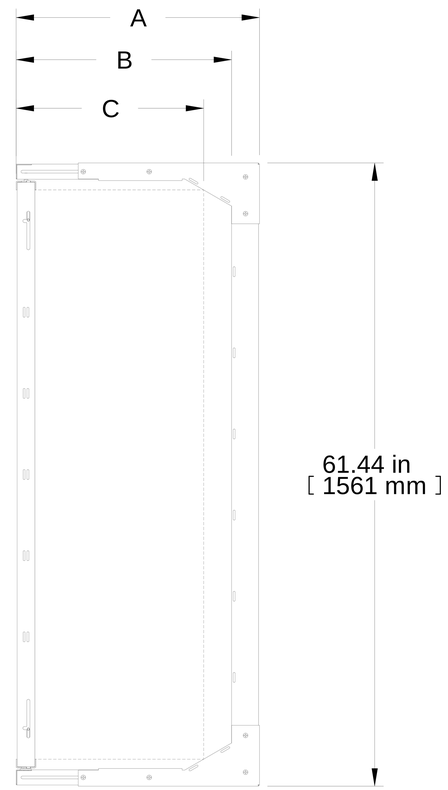


R.S. VIEW

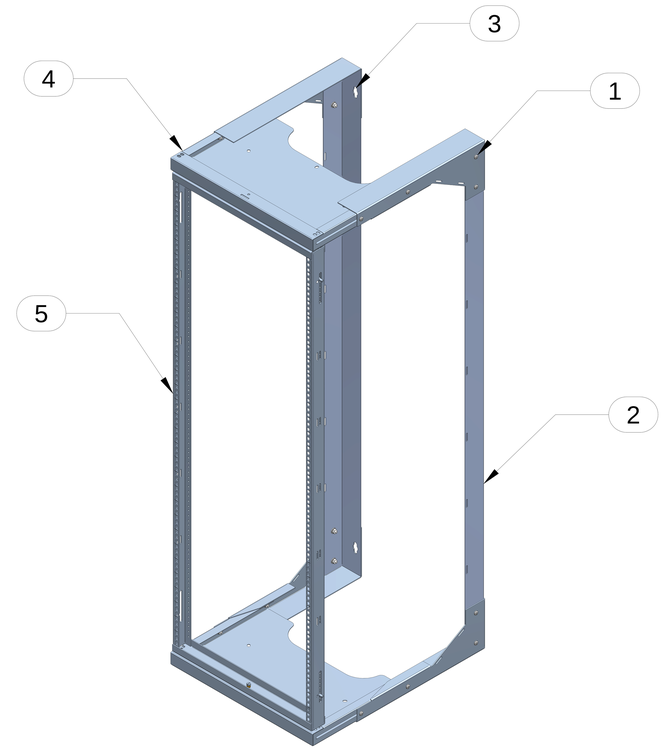


ISOMETRIC

REAR VIEW
WALL MOUNT DIMENSIONS

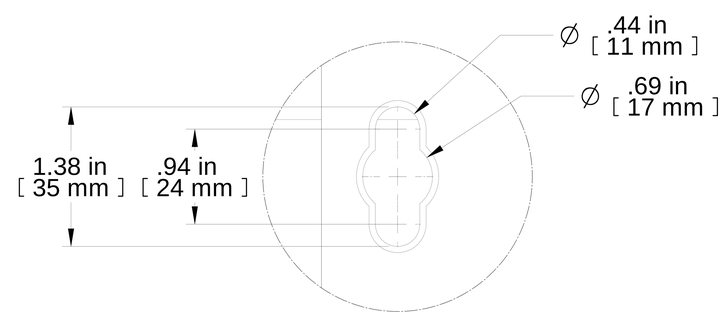


DETAIL A

| Item Number | Title | Quantity |
|---|---|---|
| 1 | HWMR - MAIN SUPPORT BRKT RH | 2 |
| 2 | HWMR - VERT WALL BRKT | 2 |
| 3 | HWMR - MAIN SUPPORT BRKT LH | 2 |
| 4 | HWMR - TOP/BTM SUPPORT | 2 |
| 5 | HWMR - SWING FRAME ASSY | 1 |
| 6 | HME - SWING FRAME SPACER | 1 |

**PART NUMBERS**

| | |
|---|---|
| HWMR1932UBK | PAINTED THIN FILM BLACK |

**NOTES**

Adjustable Depth and Rotating Rack
Shipped Knock-down, Assembly Hardware Included
No Mounting Hardware Included
See Hammond Website for More Information

**Français**

Pour tous les détails sur nos produits,
svp veuillez consulter notre site www.hammondmfg.com

Data subject to change without notice. Isometric drawing not to scale.
Les données sont sujettes à changement sans préavis.

RoHS

HAMMOND MANUFACTURING®
www.hammondmfg.com

**PART NO. HWMR1932UBK**