THIS COPY IS PROVIDED ON A RESTRICTED BASIS AND IS NOT TO BE USED IN ANY WAY DETRIMENTAL TO THE INTERESTS OF PANDUIT CORP.

PANDUIT PART NUMBER	STUD SIZE	DIMENSIONS - in.					TOOLS
		A ± .03	W ± .01	C ± .02	M ± .03	H ±.01	
PV14-6LF	#6	.90 (22.86)	.25 (6.35)	.22 (5.59)	.68 (17.27)	.14 (3.56)	*CT-100A **CT-600-A (CT-500CH) **CT-600-A (CT-550CH) **CT-1550 **CT-1551 **CT-2500 (CT-2550CH)
PV14-6LFW	#6	.90 (22.86)	.29 (7.37)	.22 (5.59)	.68 (17.27)	.14 (3.56)	
PV14-8LF	#8	.97 (24.64)	.29 (7.37)	.25 (6.35)	.73 (18.54)	.16 (4.06)	
PV14-10LF	#10	.97 (24.64)	.33 (8.38)	.25 (6.35)	.73 (18.54)	.19 (4.83)	
PV14-10LFN	#10	.97 (24.64)	.29 (7.37)	.25 (6.35)	.73 (18.54)	.19 (4.83)	

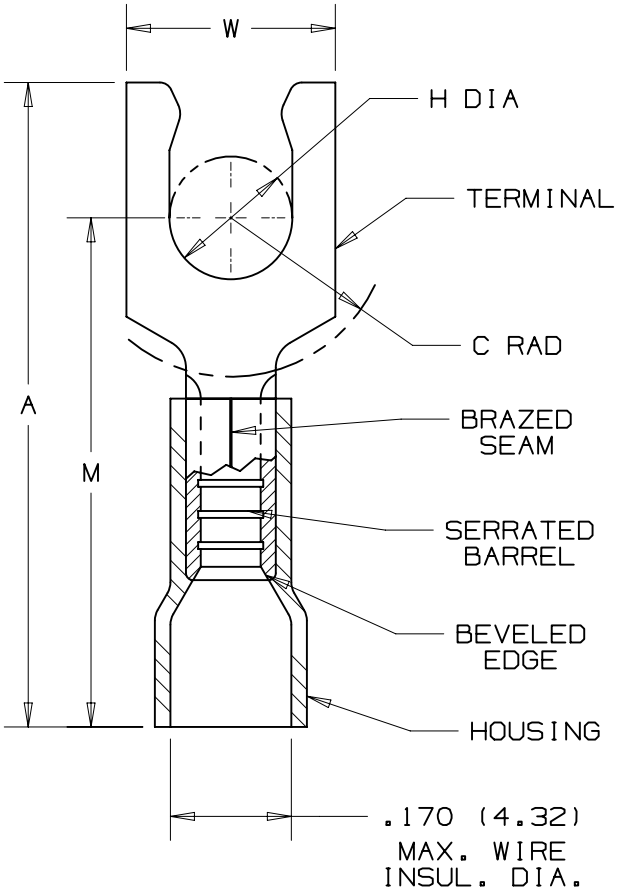

NOTES:

*USED FOR #16-14 AWG SOLID OR STRANDED COPPER WIRE & 167° F (75° C) MAX TEMP. RATING
**USED FOR #18-14 AWG SOLID OR STRANDED COPPER WIRE & 221° F (105° C) MAX TEMP. RATING

1. cULus LISTED FOR:
   A. 600V MAX. BLDG WIRE
      (1000 V MAX. IN SIGNS, FIXTURES & LUMINARIES)
2. SEE WWW.PANDUIT.COM FOR PACKAGE QUANTITIES
3. MATERIAL:
   A. STAMPING - .032" THK, COPPER TIN PLATED
   B. HOUSING - VINYL, BLUE
   C. SLEEVE - BRASS, TIN PLATED
4. DIMENSIONS IN BRACKETS ARE IN MILLIMETERS
5. WIRE STRIP LENGTH: 5/16 + 1/32 (7.9 + .8) - 0 - 0

c UL us
LISTED
587H
E52164

REV	DATE	BY	CHK	APR	DESCRIPTION	ECN
10	07/14	MBY	JHNU	RGB	REVISED NOTES, MOVED TOOLS TO TABLE, REVISED CERTIFICATION, UPDATED BORDER	N41296BB-A41296

TITLE
#16-14 BARREL FUNNELED VINYL INSULATED LOCKING FORK, .175 [4.45] MAX. WIRE INSULATION DIAMETER

CUSTOMER DRAWING

ITEM REVISION NAME: N41296BB/10

DATASET FILE NAME: N41296BB/10

PANDUIT

UNLESS OTHERWISE SPECIFIED, DIMENSIONAL TOLERANCES ARE: IN [mm]
.X ± .XXX ±
.XX ± ANGLES ±

THIRD ANGLE PROJECTION

MATERIAL: SEE NOTES

DRAWING NUMBER: A41296

DRAWN BY	DATE	CHK	SCALE	SHT 1 OF 1	SIZE
DAW		CJH	NONE		A

D10100DA/16