ANATECH ELECTRONICS, INC.

Manufacturer of RF & Microwave Filters and Products

ISO 9001 : 2000
REGISTERED FIRM

170.490 MHz Crystal Filter

Part Number: AM170.490CR216

Center Frequency (Fo)	170.490 MHz
3 dB Band Width:	15 KHz Min
Insertion Loss:	6 dB Max
Pass Band Return Loss:	15 dB Min
Pass Band Ripple:	.5 dB Max
±50 KHz	20 dB Min
Input Power	0 dBm Max
Impedance:	50 Ohms
Operating Temperature:	-30 to +60°C
Workmanship	IPC-610 Class 2
RoHS COMPLIANT	NO

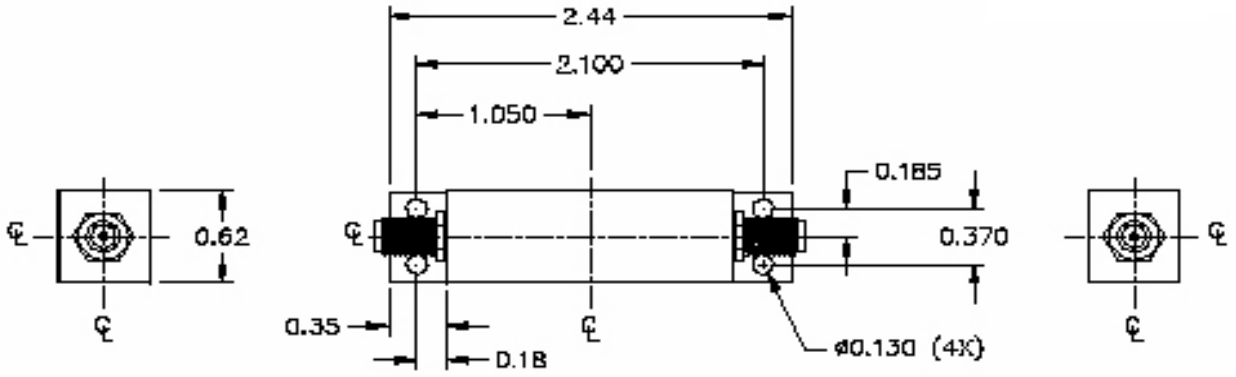

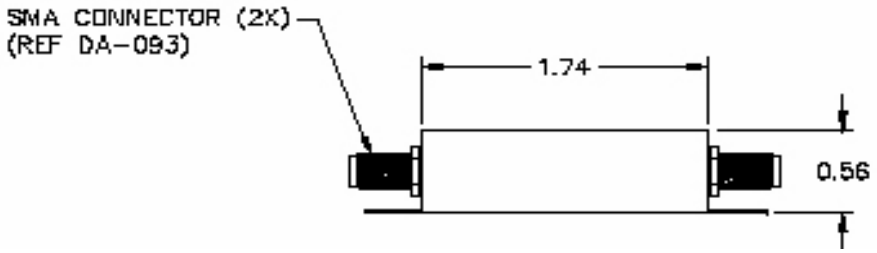

ANATECH ELECTRONICS INC. 70 Outwater Lane, Garfield, NJ 07026 Tel: (973) 772-4242 Fax: (973) 772-4646
E-Mail: sales@anatechelectronics.com Website: www.anatechelectronics.com