Alle Rechte vorbehalten/ *All rights reserved*

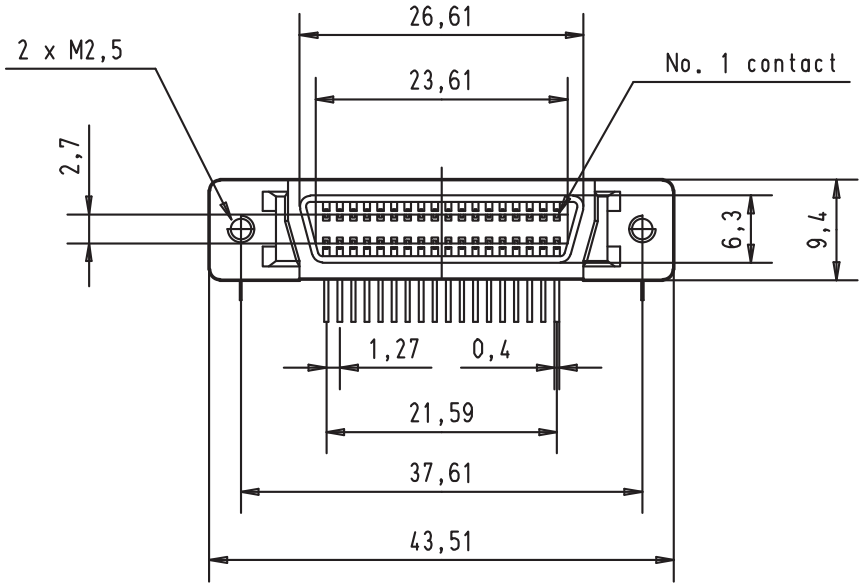

Printed Board Layout
component side

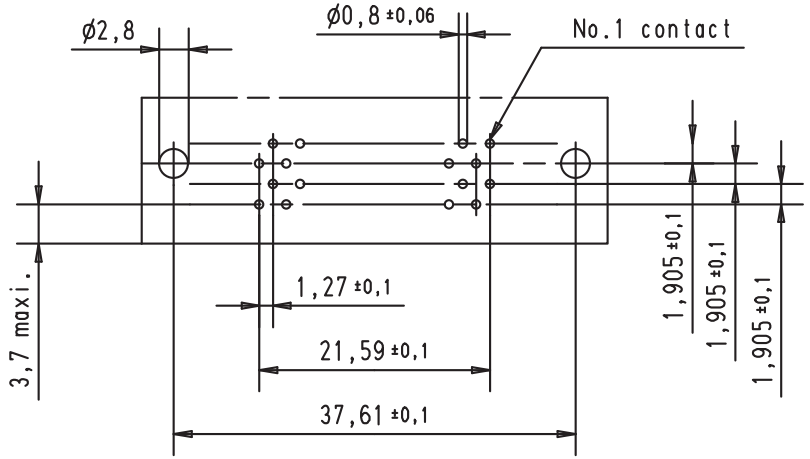

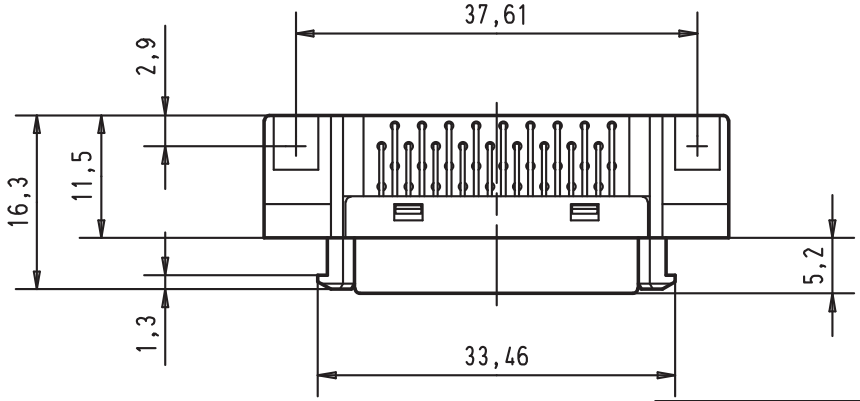

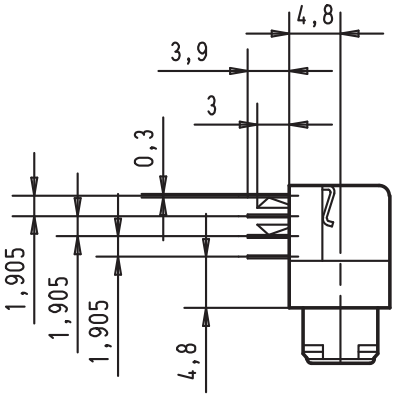

				Dat.	Name		har.mik® I/O bellow	Maßstab/ Scale
			Detail.	30-AUG-00	Alspace	All Dim. in mm	36 poles female connector with angled solder pins clips and fixed latching	1,5:1
			Insp.			Orig. Size DIN A 4		
			Stand.					
27941	30-AUG-00	Alspace	HARTING EURL F-95972 Paris				TB 60 11 036 5140	Blatt/Page 1/1
Mod.	Dat.	Name					Sub.	