RADIALL Optical Fiber Components	TECHNICAL DATA SHEET	F 728 743 000			
SINGLEMODE DUPLEX ADAPTOR – ZIRCONIA SLEEVE ALIGNEMENT		Series SC	Packaging 1	Issue 04-01-2011	Page 1/1

Original dimensions in mm [inch]

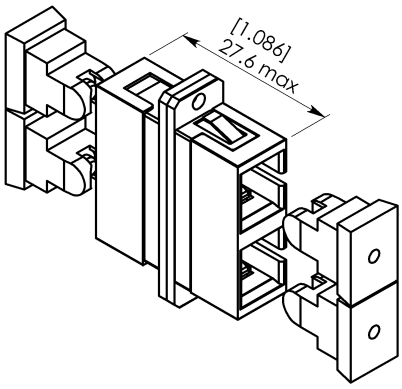

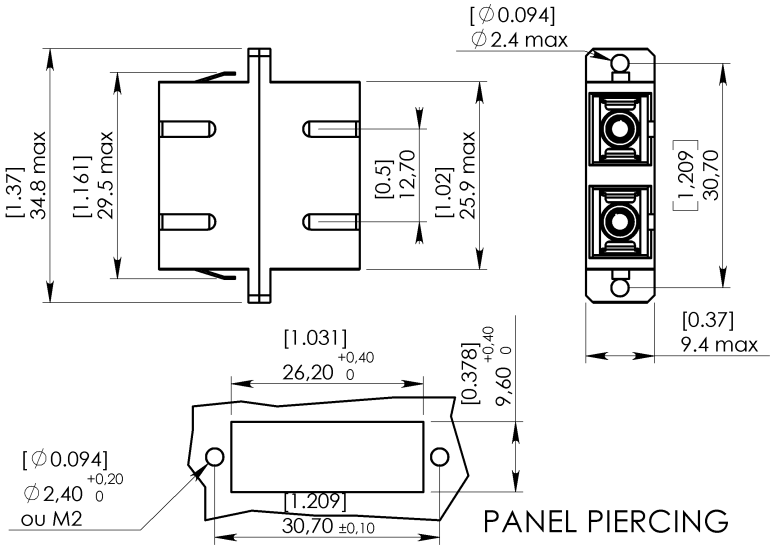

GENERAL

Type : IEC 60874-19 SC type. Push pull latching system
Body color : blue

Mounting : snap-in (or screw –in) mounting max. Panel thickness 1.6mm

Alignment sleeve : Zirconia

CHARACTERISTICS *(Dependant on fiber or cable construction)*

Material : Plastic moulded Material in accordance with BELLCORE GR 326 CORE Issue 2, par.3.3.1
Inflammability V1 (UL94)

Clip Stainless stell

Optical : Attenuation (according to IEC 61300-3-4:Substitution method, 7 type) at 1310nm :

0.25 dB Max / 0.07 dB Typ

Mechanical : **Durability** Bellcore 326, 500 cycles
Plug Retention > 68 N

Environmental : Temperature range (storage/operating) -40℃ to +85℃

Salt spray : EIA/TIA -455-16A, 35℃, 168 hr.

Vibration test : Bellcore 326,10 to 50 Hz,2 hrs./axis

Proof test : Bellcore 326, Straight pull : 6.8 Kg load at 0°
Side pull : 3.5 Kg load at 90°

CREATION				
PEN/EP CAT				
Name: CAUSSE.C				
Date: 23 Jul.99	4 jan 11	Mise à jour performances mécaniques	Poret	HD
Appr.: LV	01/09/02	Performance specified	Valencia	LV
	Issue	Revisions	Name	Appr.

RADIALL®
101, rue P. Hoffmann
93116 ROSNY/BOIS
FRANCE
Tel : (33) 0149353535
Fax : (33) 0148546363

4112-9212 This information is given as an indication. In the continual goal to improve our products, we reserve the right to make any modifications judged necessary