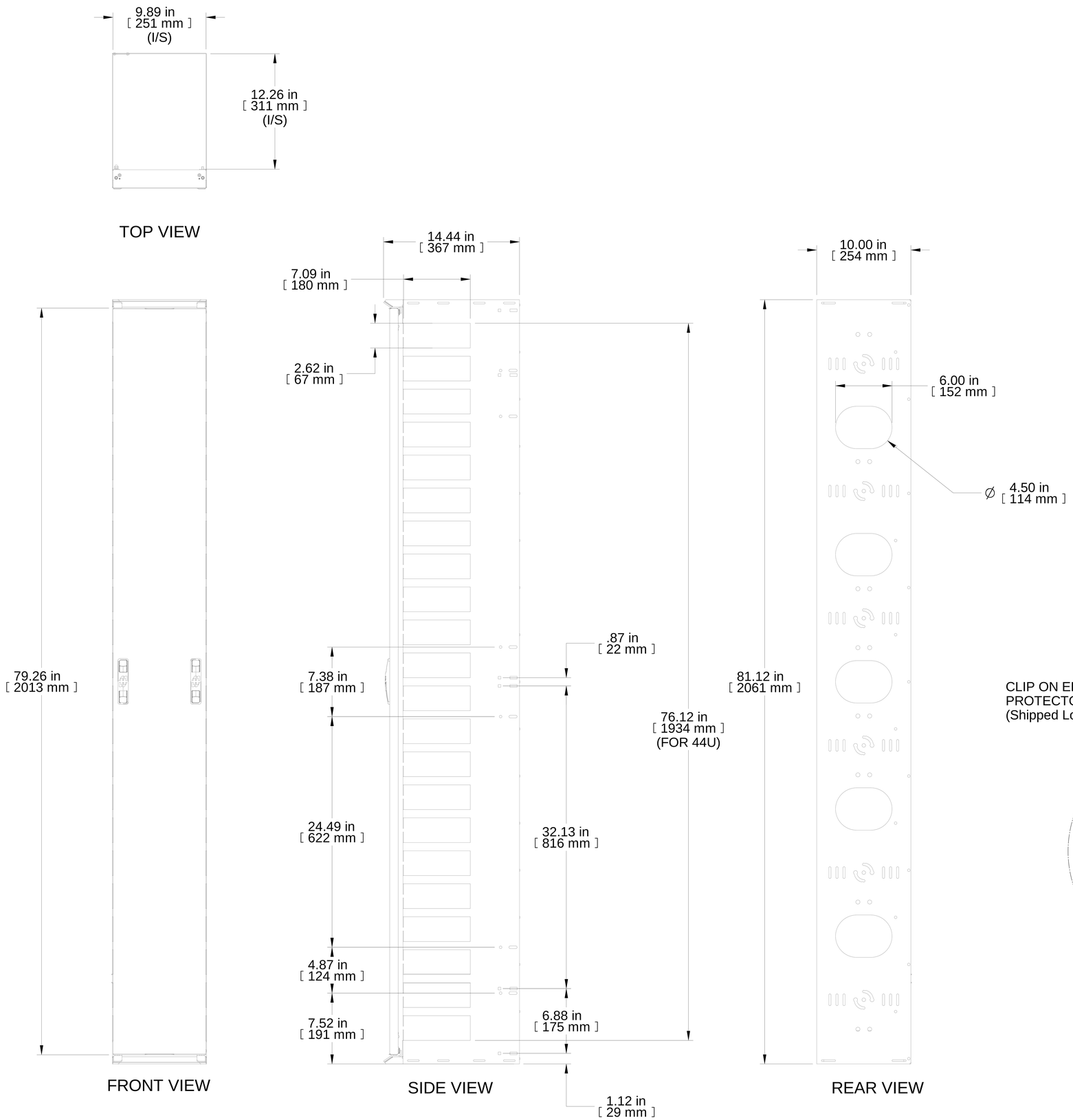


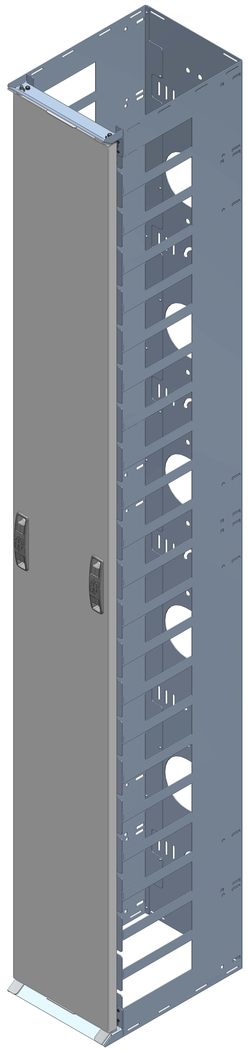

ISOMETRIC

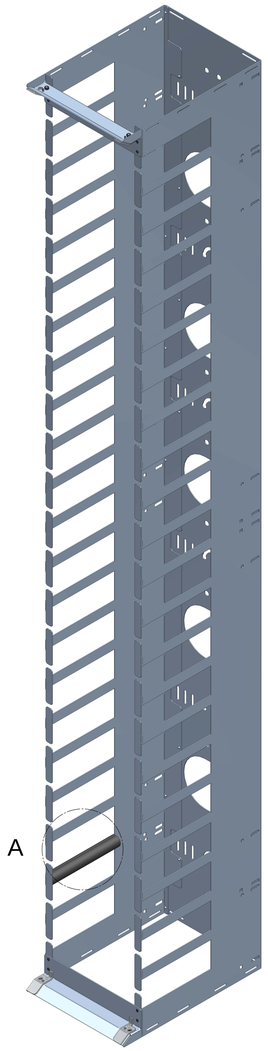


DOOR REMOVED

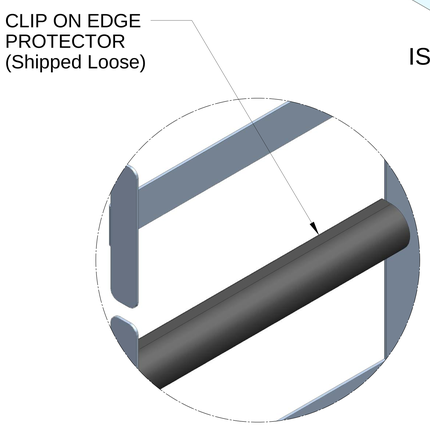


DETAIL A

| PART NUMBERS | |
|---|---|
| FRCM44U1012 | PAINTED BLACK TEXTURED |

**NOTES**

Includes Dual Hinged Door and Clip-On Protectors (Shipped Loose)
Hardware Included
See Hammond Website for More Information and Other Accessories

**Français**

Pour tous les détails sur nos produits,
svp veuillez consulter notre site www.hammondmfg.com

Data subject to change without notice. Isometric drawing not to scale.
Les données sont sujettes à changement sans préavis.

HAMMOND MANUFACTURING®

www.hammondmfg.com

**PART NO. FRCM44U1012**