TOP VIEW

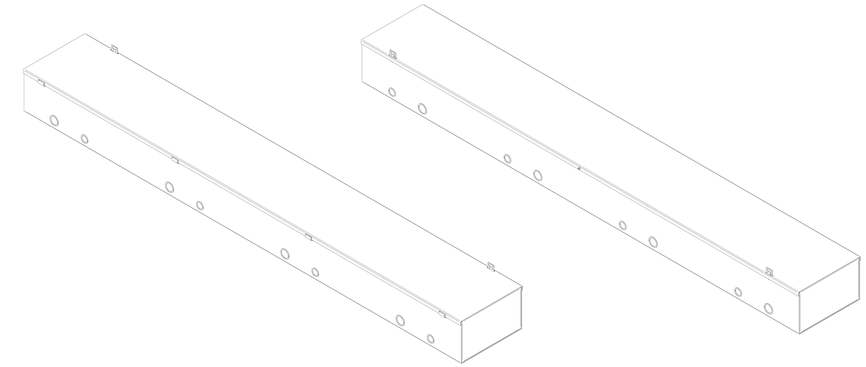

ISOMETRIC VIEWS

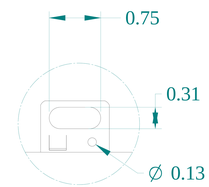


DETAIL Z
TYP

SECTION W-W

SIDE VIEW

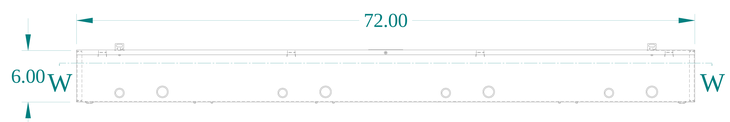


FRONT VIEW

SIDE VIEW

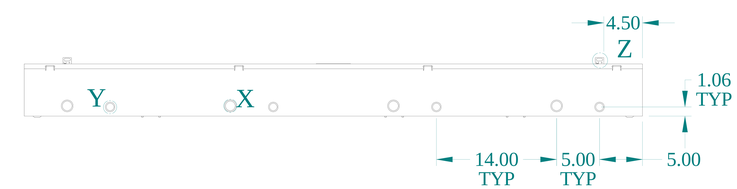


BACK VIEW

BOTTOM VIEW

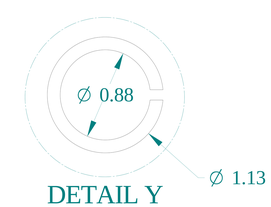


DETAIL Y
TYP

DETAIL X
TYP

HAMMOND MANUFACTURING®

www.hammondmfg.com

Data subject to change without notice.

| | |
|---|---|
| Part # : CST6403 | Date : Nov. 4, 2020 |

Link:www.hammfg.com/CST6403