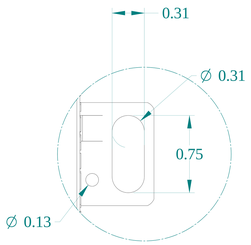

DETAIL X

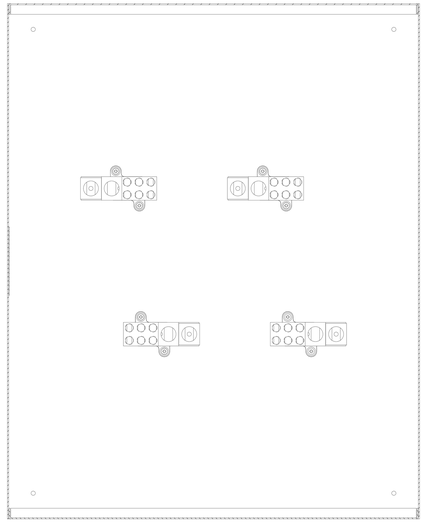

SECTION Z-Z

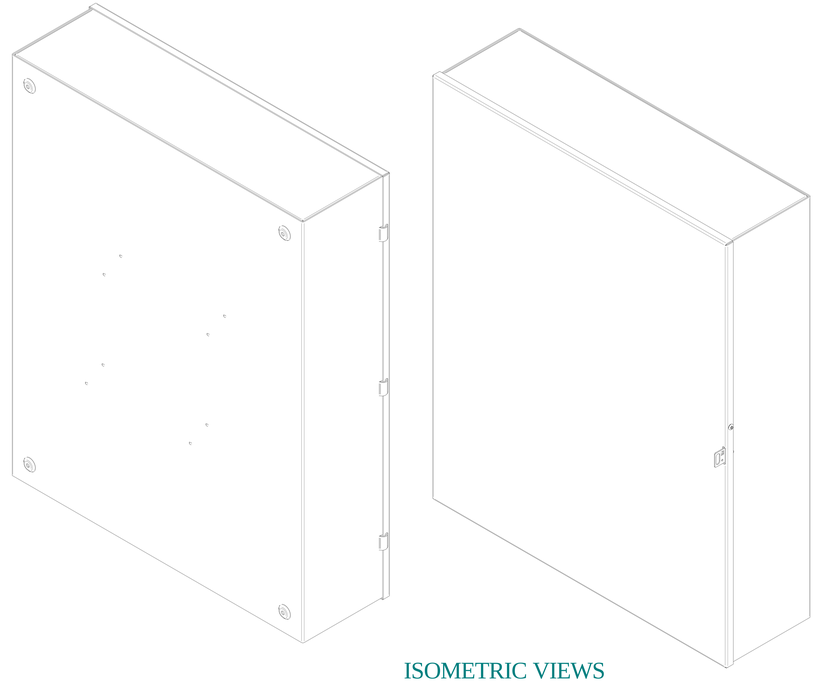

ISOMETRIC VIEWS

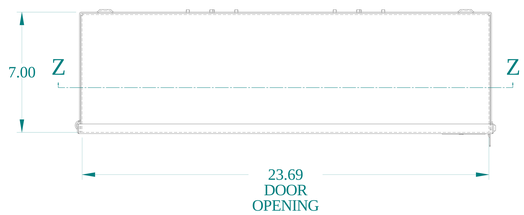

TOP VIEW

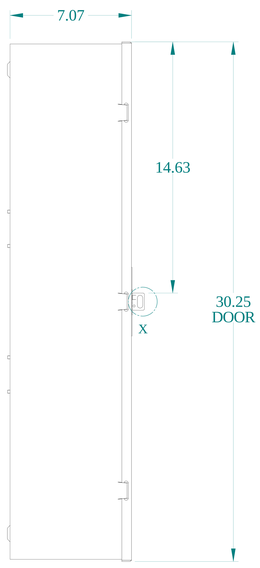

SIDE VIEW

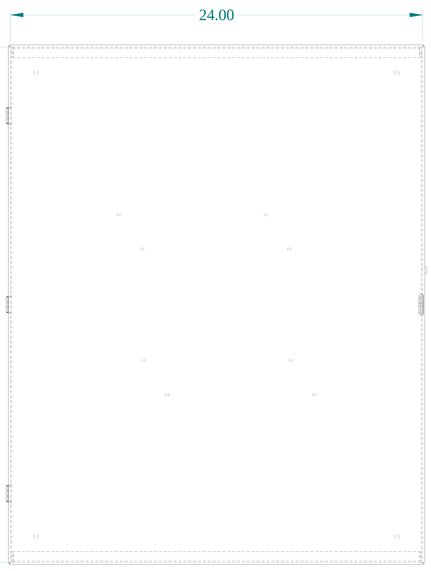

FRONT VIEW

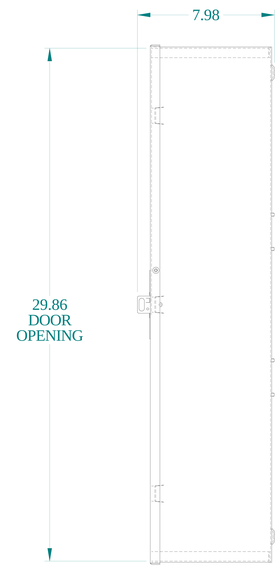

SIDE VIEW

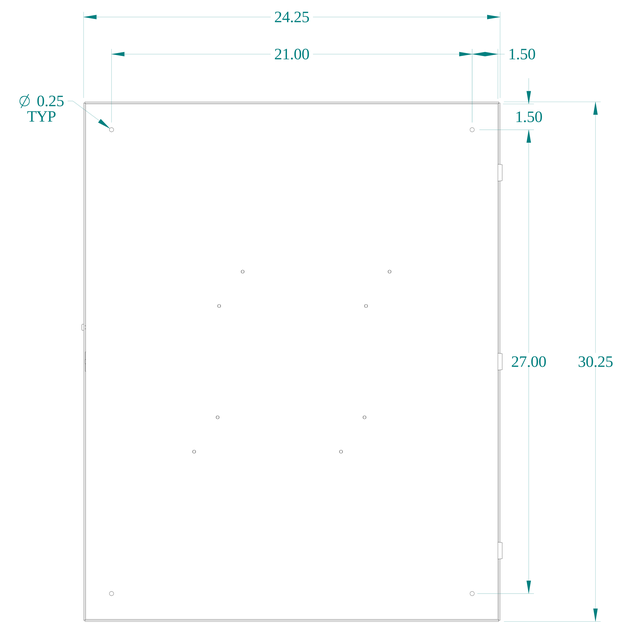

BACK VIEW

BOTTOM VIEW

HAMMOND MANUFACTURING®

www.hammondmfg.com

Data subject to change without notice.

Part # : CSB604	Date : Nov. 4, 2020

Link:www.hammfg.com/CSB604