May.1.2023 Copyright 2023 HIROSE ELECTRIC CO., LTD. All Rights Reserved.
In case of consideration for using Automotive equipment / device which demand high reliability, kindly contact our sales window correspondents.

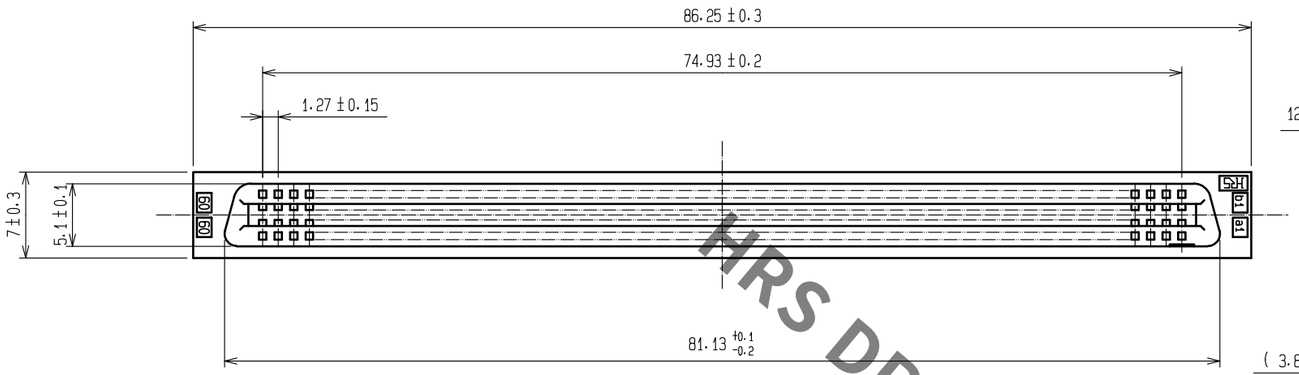

RECOMMENDED PC BOARD HOLE PATTERN (MOUNTING SIDE)
(FREE)t=1.6

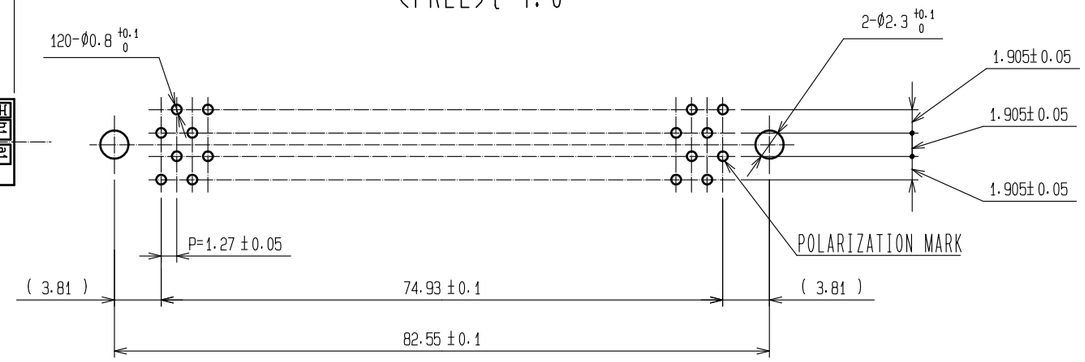

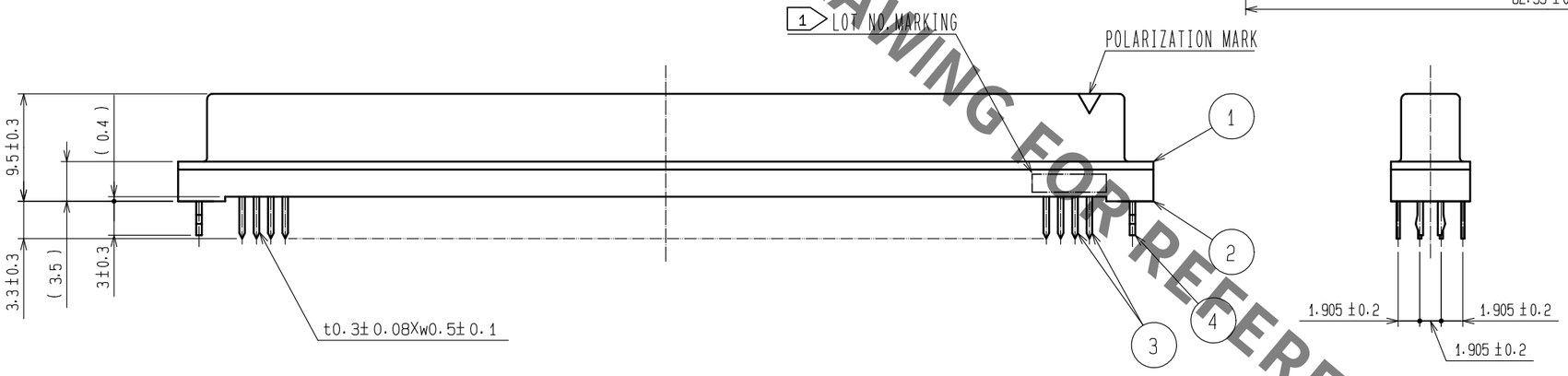

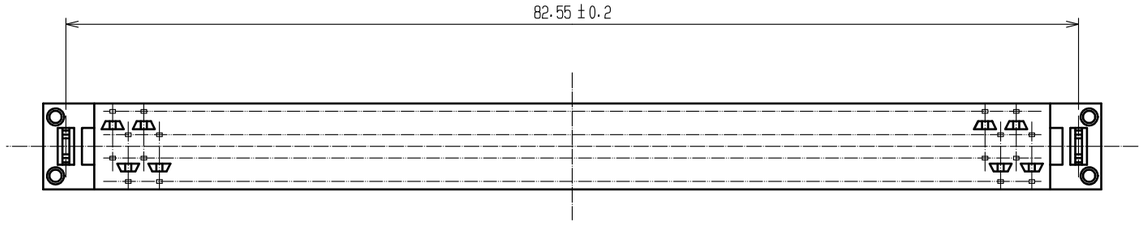

HRS DRAWING FOR REFERENCE

NOTES 1 LOT NO. MARKING SIDE SHALL BE OPTIONAL.
2. THE DIMENSIONS IN PARENTHESES ARE FOR REFERENCE.

NO.	MATERIAL	FINISH , REMARKS
4	PHOSPHOR BRONZE	TIN-PLATING
1,2	POLYAMIDE	BLACK 1

NO.	MATERIAL	FINISH , REMARKS
3	PHOSPHOR BRONZE	CONTACT AREA : GOLD 0.2μm min. DIP AREA : TIN-PLATING 2μm min. UNDER PLATING : NICKEL 2μm min.

UNITS	SCALE	COUNT	DESCRIPTION OF REVISIONS	DESIGNED	CHECKED	DATE
mm	2 : 1	1 (1)	DIS-F-00015268	YU. NAKADA	HT. YAMAGUCHI	20220908

HRS HIROSE ELECTRIC CO., LTD.

APPROVED	HS. OKAWA	20070810
CHECED	HS. OZAWA	20070810
DESIGNED	KY. NAKAMURA	20070810
DRAWN	TP. MATSUMOTO	20070809

DRAWING NO. EDC-082545-71-21
PART NO. FX2C-120S-1.27DSAL(71)
CODE NO. CL0572-2459-7-71 (1) 1/1

FORM HC0011-5-7