Ultra Low Power Wi-Fi® Modules

For Battery Powered IoT Applications

DA16200 Modules

Full Offload Highly Integrated Ultra Low Power Wi-Fi Modules

- The fully integrated module consists of the DA16200 SoC, 4MB flash memory, RF components including crystal oscillator, RF lumped filter, and either a chip antenna or a connector for an external antenna
- Single power supply voltage (3.3V)
- 37 pins including GPIOs, JTAG, RTC control, UART, power input, and 32.768kHz crystal
- DA16200 module SKUs:
  - DA16200MOD-AAC4WA32 with on board chip antenna
  - DA16200MOD-AAE4WA32 with external antenna connector (u.FL)
- Dimensions
  - Both modules have the same dimensions
  - 13.8 mm x 22.1 mm x 3.3 mm

Module Types

On Board Chip Antenna
13.8 mm x 22.1 mm x 3.3 mm
DA16200MOD-AAC4WA32

External Antenna Connector (u.FL)
13.8 mm x 22.1 mm x 3.3 mm
DA16200MOD-AAE4WA32

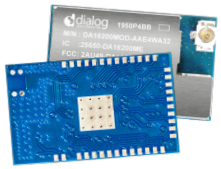

Block Diagram (SoC)

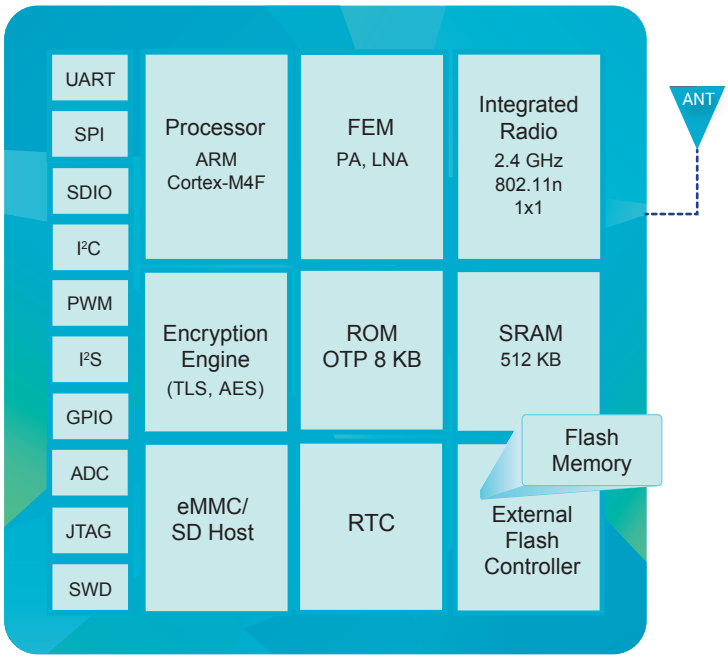

Country	On Board Chip Antenna	External Antenna Connector (u.FL)
US FCC	2AU49-DA16200MC	2AU49-DA16200ME
Canada IC	25650-DA16200MC	25650-DA16200ME
EU CE	CE & RoHS Compliance	CE & RoHS Compliance
South Korea KC	R-C-fci-DA16200M-C4WA3	R-C-fci-DA16200M-E4WA3
Japan TELEC	201-190886	201-190892
China SRRC	2020DP0489	2020DJ0161(M)

Wi Fi® CERTIFIED

dialog SEMICONDUCTOR

Low Power Wi-Fi Modules For Battery Powered IoT Applications

Features	Benefits
Ultra Low Power	• Breakthrough VirtualZero™ technology • Virtually no power consumption in sleep state • Enables year-plus battery life • Ultra low power sensor wake-up
Superior Range	• Industry leading output power and Rx sensitivity for max range
Highly Integrated SoC	• 802.11b/g/n radio PHY, BB/MAC, PA, LNA w/on chip SRAM • Up to 72 Mbps, MCS0-7
Full Offload	• SoC runs full OS & TCP/IP stack
Simple Setup & Provisioning	• Automatically find & configure new devices w/ smartphone app
Complete Software Stack	• Comprehensive networking software stack
Leading Security	• Secure boot • Secure debug • Secure asset storage • Hardware accelerated • TLS • Digital certificates • Elliptic curve
OTA Firmware Update	• Enables field deployed device firmware updates
Multiple I/Os	• UART, SPI, SDIO, ADC, I²C, PWM, I²S, GPIOs, JTAG and SWD
eMMC/SD Expanded Memory	• Data logging, memory intensive applications

VirtualZero™

Leading Edge Low Power Technology

> 1 Year Battery Life

Three Sleep Modes
1. Unconnected (nanoamp)
2. Connected ultra low (microamp)
3. Connected ultra fast (microamp)

Ultra Fast Wake-up
Ultra Fast Return to Sleep
Extends battery life

Additional Features

Extended Range
> +20 dBm range booster mode
> -100 dBm Rx sensitivity

Highly Integrated SoC
+ No CPU or MCU required
+ Full offload
+ Runs network stack

Networking Capabilities		
	Protocols	Complete software stack including TCP/UDP/IP, HTTP, HTTPs, DHCP client/server, DNS client/server, mDNS, DNS-SD, MQTT, CoAP
	Provisioning	Included smartphone app for iOS & Android; WPS 2.0
	Sensors	ADC: 4-channel SAR 12-bit, I²C, SPI, PWM, and I²S

Dialog Semiconductor Worldwide Sales Offices

www.dialog-semiconductor.com email:info@diasemi.com

United Kingdom
Phone: +44 1793 757 700

The Netherlands
Phone: +31 73 640 8822

Japan
Phone: +81 3 5769 5100

Hong Kong
Phone: +852 3769 5200

China (Shenzhen)
Phone: +86 755 2981 3669

Germany
Phone: +49 7021 8050

North America
Phone: +1 408 845 8500

Taiwan
Phone: +886 2 80718888

Korea
Phone: +82 2 3469 8200

China (Shanghai)
Phone: +86 21 5424 9058

dialog SEMICONDUCTOR