ORDER NO.	WOODHEAD NO.	COLOR
130155-0091	60W33DPLXGF	YELLOW

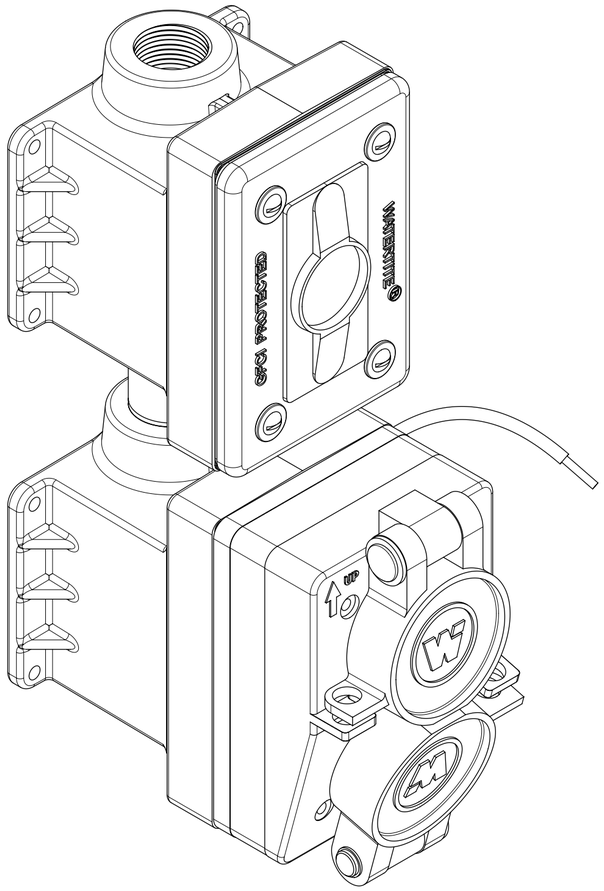

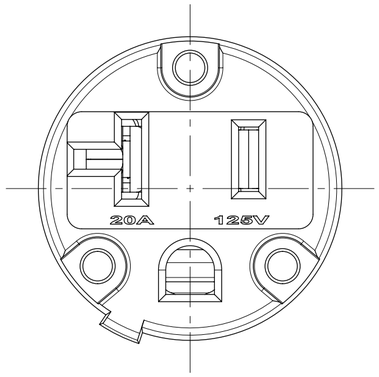

FACE VIEW

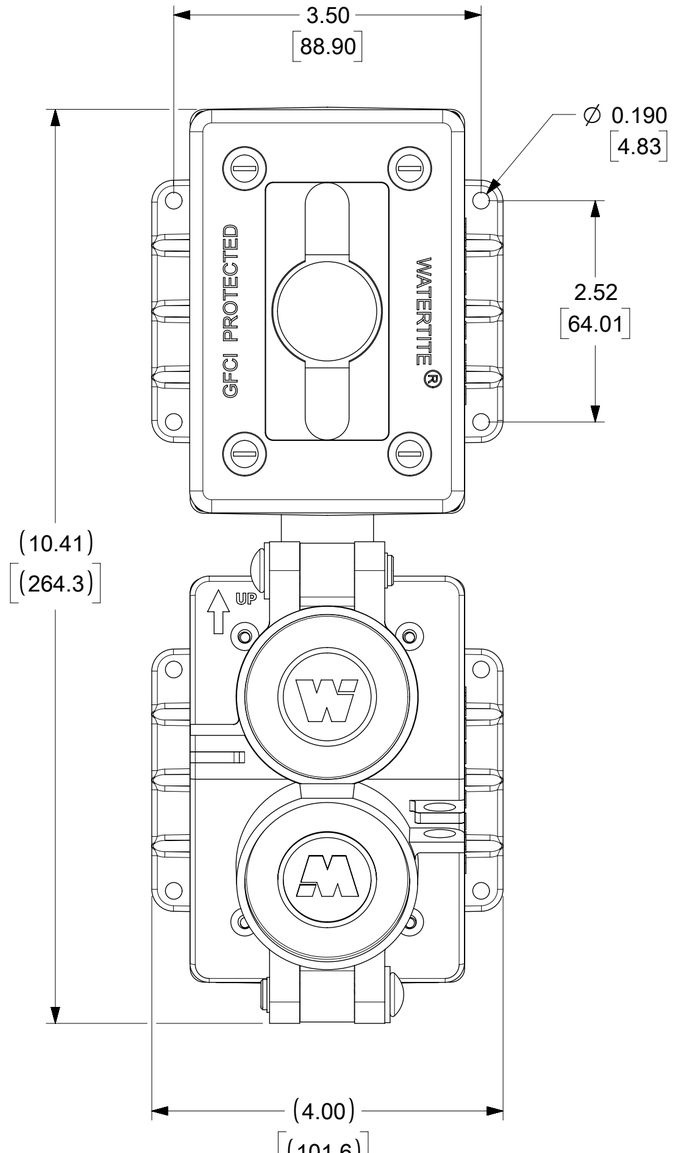

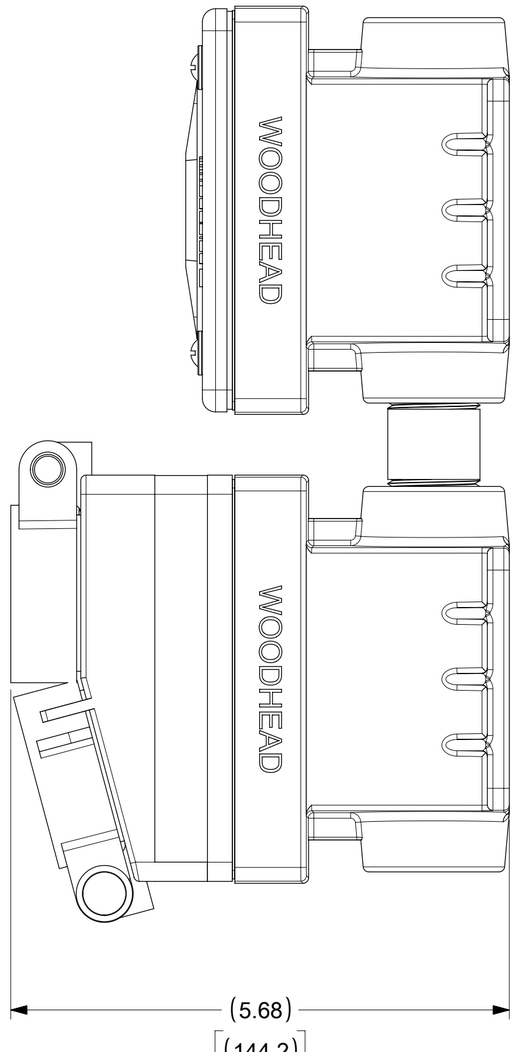

DESCRPITION	MATERIAL	QTY.
COVER FLIP LID	NYLON, STAINLESS STEEL	1
COVER PLATE	STAINLESS STEEL	1
GASKET	NEOPRENE	1
FEMALE INSERT ASSY	NYLON, BRASS, NICKEL & ZINC PLATED	2
RETAINING SCREWS	STAINLESS STEEL	6
MOUNTING PLATE FD BOX	STAINLESS STEEL	4
FD BOX	COMPOSITE, UNSATURATED POLYCARBONATE	2
GFCI DEVICE 20A	POLYCARBONATE, THERMOPLASTIC, PLATED STEEL, BRASS.	1
PHILLIPS SCREW	STAINLESS STEEL	8
GFCI COVER PLATE	SILICONE	1
SCREW PAN HEAD	STAINLESS STEEL	4
THREADED NIPPLE	CHLORINATED POLYVINYL CHLORIDE (CPVC)	1
JUMPER WIRE ASSY	COPPER, BRASS (TINNED FINISH)	1
SCREW (GROUND WIRE)	STAINLESS STEEL	1
BLACK WIRE - 3.0 IN LONG	COPPER WIRE	1
GREEN WIRE - 2-3/4 IN LONG	COPPER WIRE	1
WHITE WIRE - 4 IN LONG	COPPER WIRE	1
#12-1 BLACK PVC WIRE	COPPER WIRE	1
#12-1 GREEN PVC WIRE	COPPER WIRE	1
#12-1 WHITE PVC WIRE	COPPER WIRE	1

DOCUMENT STATUS	P1	RELEASE DATE	2019/03/18 22:50:37

SYMBOLS: = 0 (FA) = 0 (FC) = 0 (FD) = 0 (S) = 0 = 0 (C) = 0 = 0 = 0 = 0

THIS DRAWING CONTAINS INFORMATION THAT IS PROPRIETARY TO MOLEX ELECTRONIC TECHNOLOGIES, LLC AND SHOULD NOT BE USED WITHOUT WRITTEN PERMISSION

DIMENSION UNITS: INCH[MM] SCALE: NTS

GENERAL TOLERANCES (UNLESS SPECIFIED)

	MM	INCH
4 PLACES	±	±
3 PLACES	±	±
2 PLACES	±	±
1 PLACE	±	±
0 PLACES	±	±
ANGULAR TOL	± °	

DRAFT WHERE APPLICABLE MUST REMAIN WITHIN DIMENSIONS

CURRENT REV DESC: MIGRATE TO ECTR/NX

EC NO: 613337
DRWN: SRPATIL 2019/01/08
CHK'D: DNGUYEN62 2019/03/12
APPR: HKNEELAND 2019/03/18

INITIAL REVISION:
DRWN: SRPATIL 2019/01/08
APPR: HKNEELAND 2019/03/18

THIRD ANGLE PROJECTION | DRAWING: C-SIZE | SERIES: 130155

molex

WATERTITE FD GFCI DUPLEX ASSY 2P3W 5-20

PRODUCT CUSTOMER DRAWING

DOCUMENT NUMBER	DOC TYPE	DOC PART	REVISION
1301550091	PSD	000	A

MATERIAL NUMBER	CUSTOMER	SHEET NUMBER
SEE TABLE	GENERAL MARKET	1 OF 1

FORMAT: Eng-tega-master-tb-prod-C REVISION: D DATE: 2018/01/18