DATE	DESCRIPTION	REV.
8.12.11	CHANGE AS PER ECN 11-104	A
1.10.22	CHANGE AS PER ECN 22-003 B1 WAS .931, B2 WAS 1.015	B

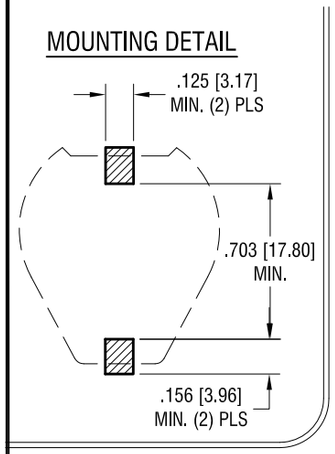

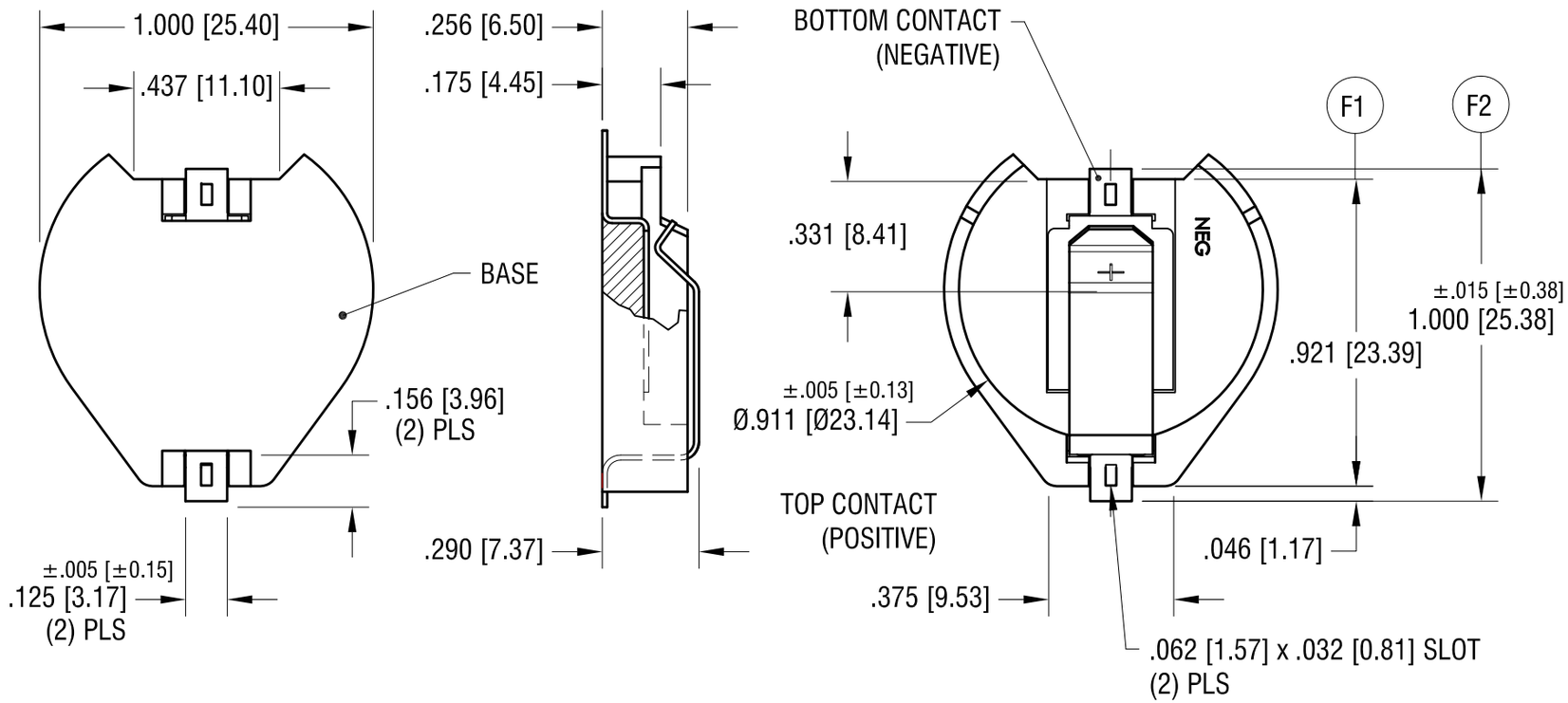

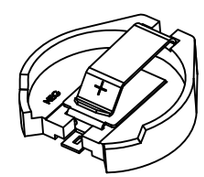

ACTUAL SIZE

NOTES:

1. BASE:
   MAT'L - HIGH TEMPERATURE NYLON (UL 94V-0)
   COLOR BLACK
2. CONTACTS (TOP AND BOTTOM):
   MAT'L - .015 [0.38] TH'K SPRING STEEL
   FINISH: GOLD FLASH PLATE

THIS DOCUMENT IS THE PROPERTY OF KEYSTONE ELECTRONICS CORP. AND SHALL NOT BE REPRODUCED, DISTRIBUTED OR USED AS A BASIS FOR MANUFACTURE WITHOUT PRIOR WRITTEN PERMISSION FROM KEYSTONE ELECTRONICS CORP.

KEYSTONE ELECTRONICS CORP.
www.keyelco.com • NEW HYDE PARK, NY 11040 • Tel (516) 328-7500

PART NAME	23mm BATTERY HOLDER, SMT		
MATERIAL	AS NOTED		
FINISH	AS NOTED	DRN BY NT	DATE 3.19.01
		APP'D RH	SCALE 2X
TOLERANCES INCH [MM] DECIMAL ± .010 [± 0.25] ANGULAR ± 1° UNLESS OTHERWISE SPECIFIED	CODE C	DWG NO. 1091	