TOP VIEW

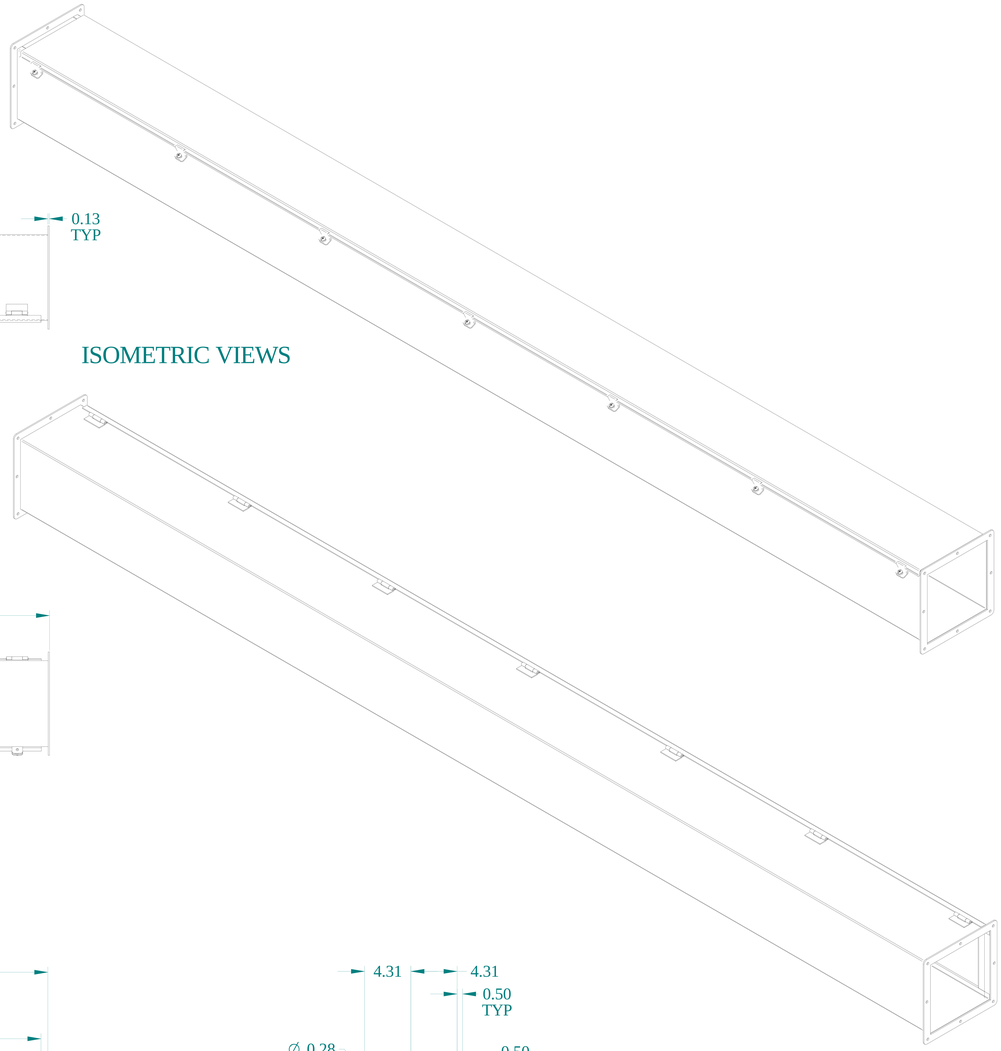

ISOMETRIC VIEWS

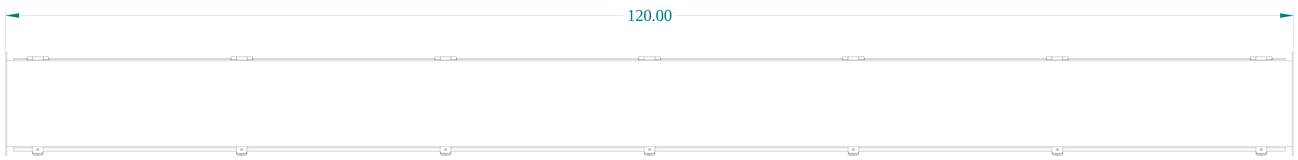


BACK VIEW

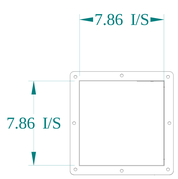


SIDE VIEW

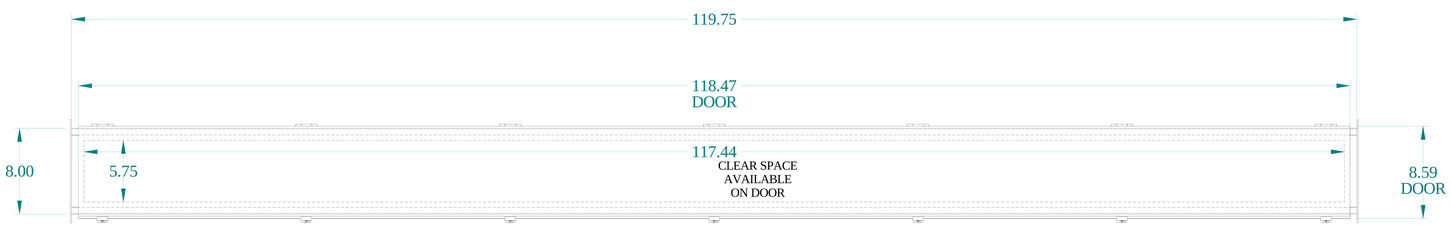


FRONT VIEW

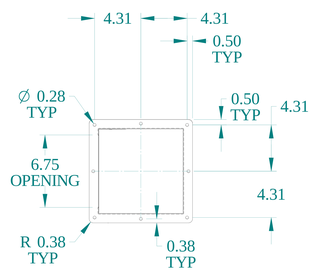


SIDE VIEW

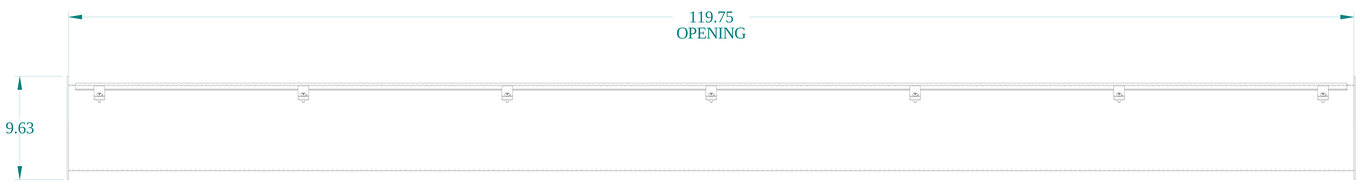


BOTTOM VIEW

HAMMOND MANUFACTURING®

www.hammondmfg.com

Data subject to change without notice.

| | |
|---|---|
| Part # : 1487E120 | Date : Mar. 13, 2023 |

Link:www.hammfg.com/1487E120