S6 3.5mm JACK SOCKET

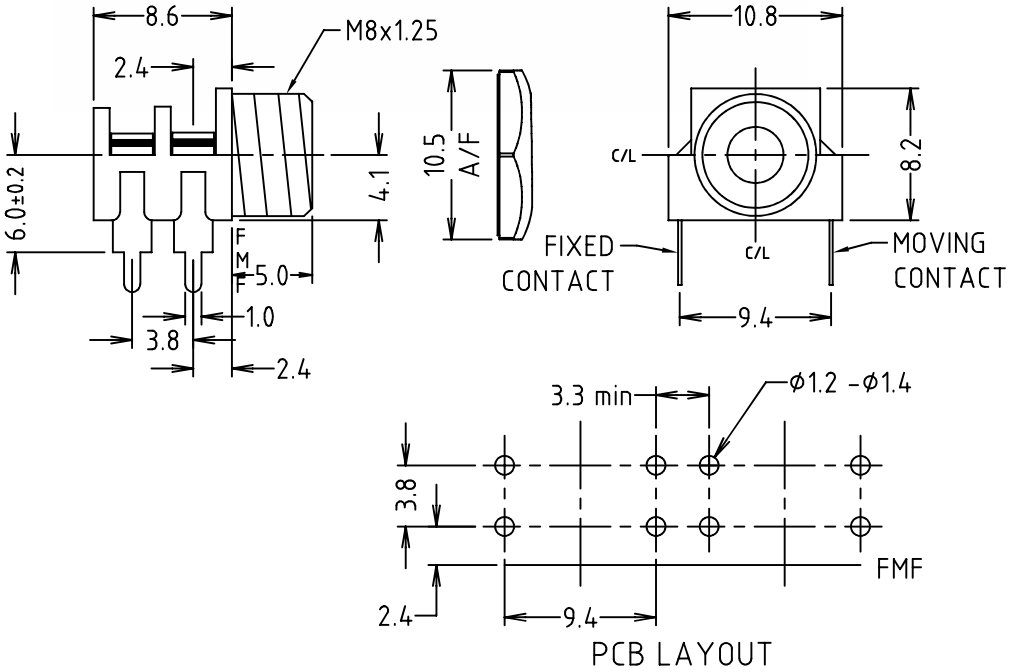

CL1384ASM - S6/BB PC Mono Switched 3.5mm jack socket.
Right angle PCB mounting with 6.0mm height from the board.
Supplied assembled with hex nut.

© CLIFF 01/2021 ISS.1

For further information, contact sales@cliffuk.co.uk

Cliff Electronic Components Limited,
76 Holmethorpe Avenue, Holmethorpe Ind. Estate,
Redhill, Surrey RH1 2PF U.K.
Tel: +44 (0)1737 771375 Fax: +44 (0)1737 766012

Visit us online at:
www.cliffuk.co.uk