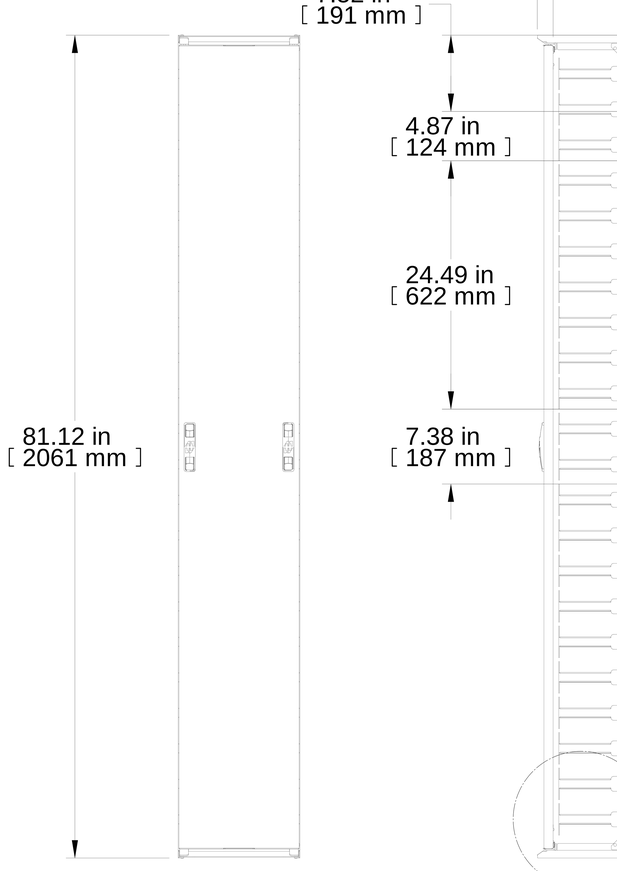

REAR VIEW

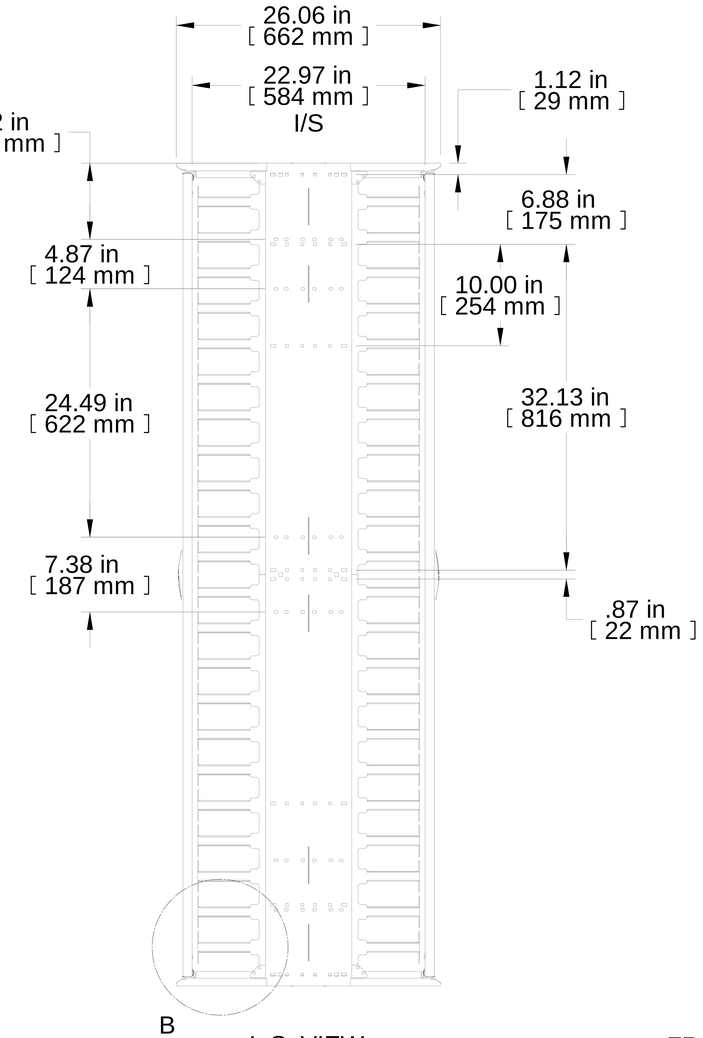

L.S. VIEW

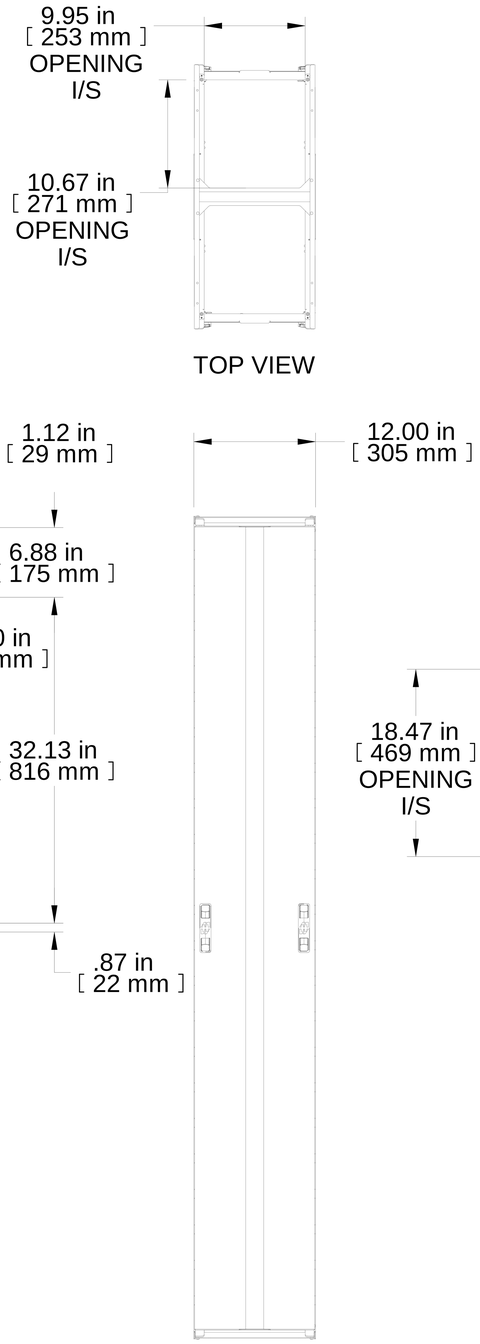

TOP VIEW

FRONT VIEW

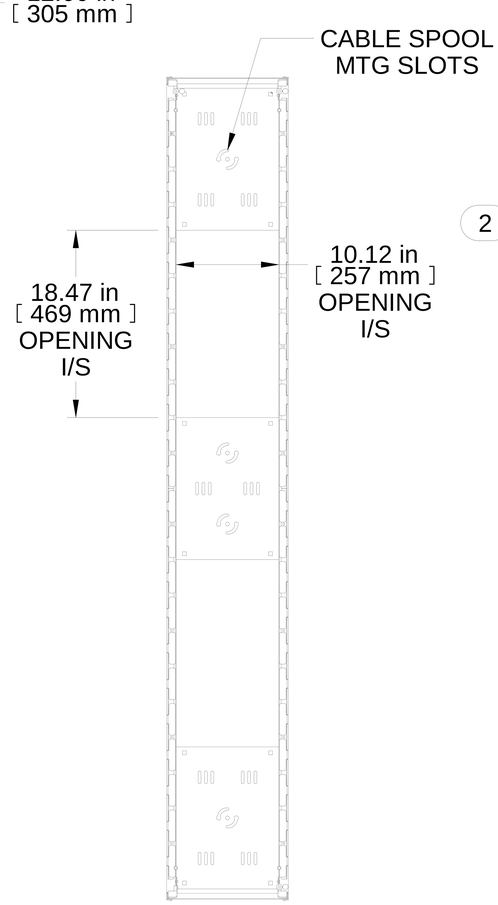

FRONT VIEW
DOORS REMOVED

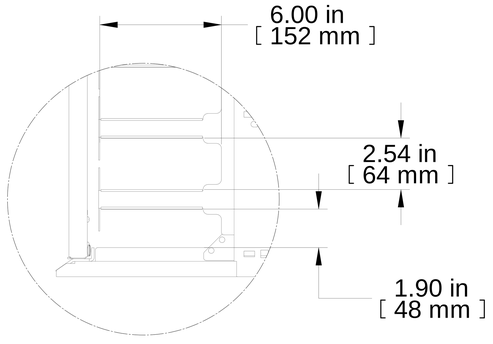

DETAIL B

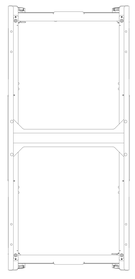

BOTTOM VIEW

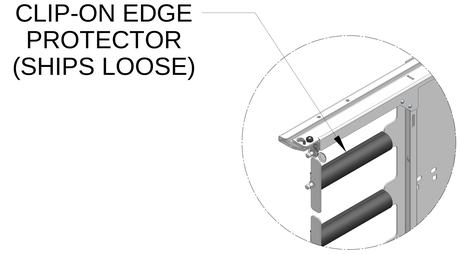

DETAIL A

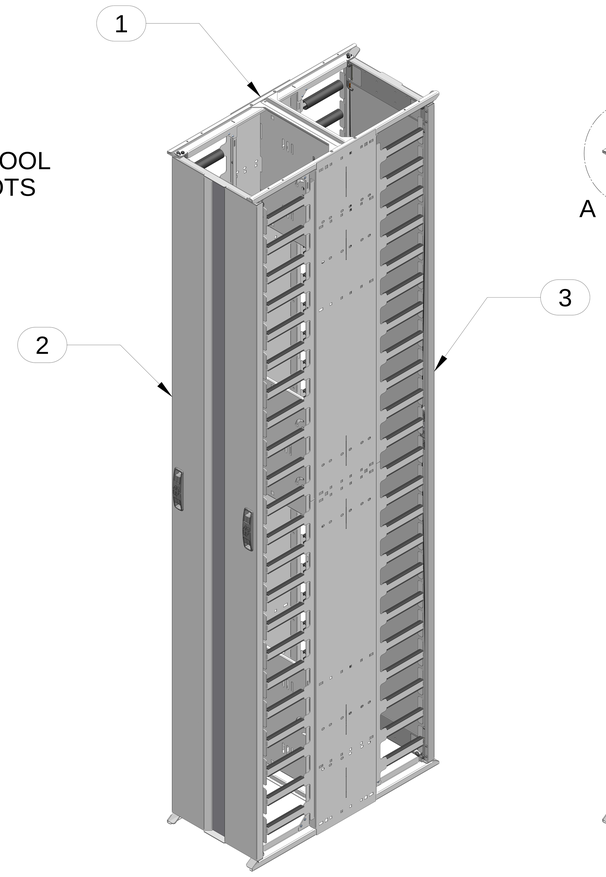

ISO VIEW

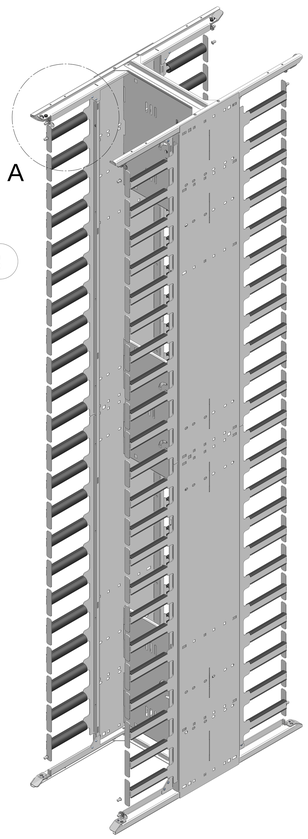

ISO VIEW
DOORS REMOVED

Item Number	Title	Quantity
1	DBL MANAGER WELD BODY 12 X 24.5	1
2	VFM 3PC DOOR 12"W	1
3	VFM 1PC DOOR 12"W	1

PART NUMBERS

VFMMD12BK	PAINTED TEXTURED BLACK

NOTES

Includes Dual Hinged Doors & Clip-On Protection (Ships Loose)
Mounting Hardware Included
See Hammond Website for Additional Resources

Français

Pour tous les détails sur nos produits,
svp veuillez consulter notre site www.hammondmfg.com

Data subject to change without notice. Isometric drawing not to scale.
Les données sont sujettes à changement sans préavis.

HAMMOND MANUFACTURING®

www.hammondmfg.com

PART NO. **VFMMD12BK**