ORDER NO	130083-0240
WOODHEAD ENG. NO	92482
WIRE GAUGE	14
CONDUCTORS	8
AMPERAGE	8A
WORKING CORD	30 FT. BLACK
CORD TYPE	SOOW
CONSTRUCTION	HEAVY WALL CAST ALUMINUM
PAINT	YELLOW POWDER COAT
REEL ENCLOSURE RATING	NEMA 4 INDOOR / OUTDOOR
RETRACTION WEIGHT	4.0 LB [1.8 KG]

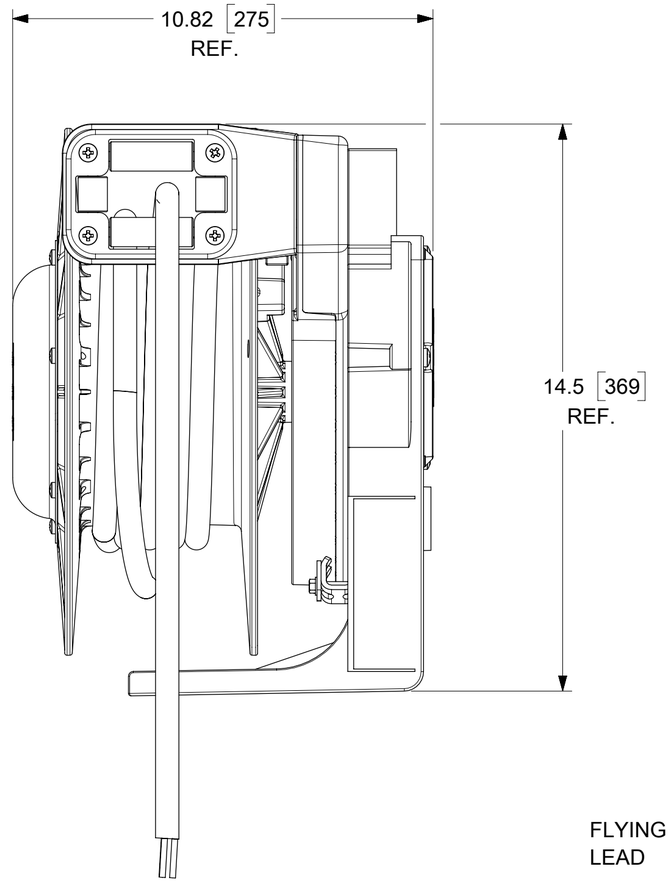

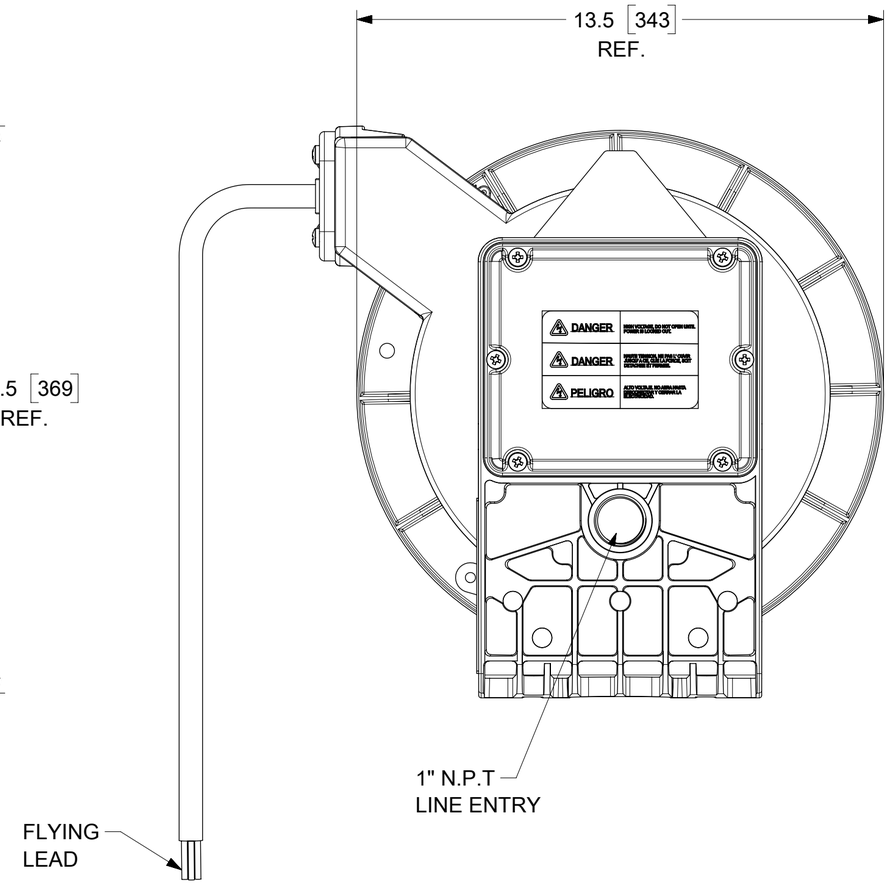

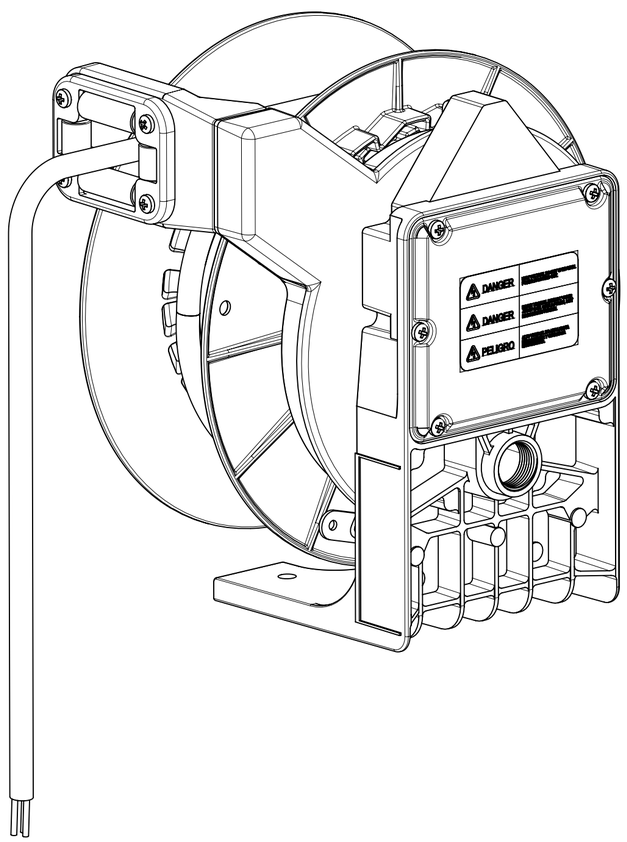

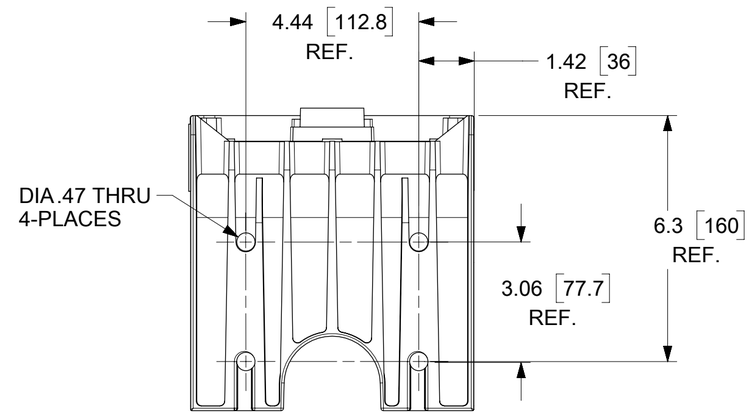

BOTTOM VIEW

NOTES:

1. CABLE GUIDE IS ADJUSTABLE EVERY 5 DEGREES OVER 270 DEGREE ARC.
2. RATCHET LOCK IS EASY TO DISENGAGE FOR CONSTANT TENSION.
3. REEL CANNOT BE "LOCKED OUT" AT FULL EXTENSION.

THIS DRAWING CONTAINS INFORMATION THAT IS PROPRIETARY TO MOLEX ELECTRONIC TECHNOLOGIES, LLC AND SHOULD NOT BE USED WITHOUT WRITTEN PERMISSION

FUNCTIONAL SYMBOLS: FA = 0, FC = 0, FP = 0

DIVISIONAL SYMBOLS

DIMENSION UNITS: INCH/MM
SCALE: NTS

GENERAL TOLERANCES (UNLESS SPECIFIED)

	MM	INCH
4 PLACES	±	±
3 PLACES	±	± 0.005
2 PLACES	± 0.13	± 0.01
1 PLACE	± 0.25	± 0.02
0 PLACES	±	±
ANGULAR TOL	± 0.5 °	

DRAFT WHERE APPLICABLE MUST REMAIN WITHIN DIMENSIONS

CURRENT REV DESC: RELEASE CUSTOMER DRAWING

EC NO: 674250
DRWN: VHANDI 2020/07/17
CHK'D: DSOPPIN 2022/05/11
APPR: HKNEELAND 2022/05/13

INITIAL REVISION:
DRWN: VHANDI 2020/07/17
APPR: HKNEELAND 2022/05/13

molex

CABLE REEL - INDUSTRIAL DUTY 30' #14-8 SOOW

PRODUCT CUSTOMER DRAWING

DOCUMENT NUMBER	DOC TYPE	DOC PART	REVISION
1300830240	PSD	000	A

THIRD ANGLE PROJECTION	DRAWING	SERIES	MATERIAL NUMBER	CUSTOMER	SHEET NUMBER
	C-SIZE	130083	SEE TABLE	GENERAL MARKET	1 OF 1

DOCUMENT STATUS	P1	RELEASE DATE	2022/05/13 20:24:00

FORMAT: IN-master-B-prod-C
REVISION: D
DATE: 2020/01/14