ANATECH ELECTRONICS, INC.

Manufacturer of RF & Microwave Filters and Products

ISO 9001 : 2000
REGISTERED FIRM

AM Crystal Filter

P/N: AM621CR148

Specification:

Filter Type	Band Pass
Center Frequency (Fo)	621 KHz
3 dBc Band Width:	± 4KHz Max *
Insertion Loss:	7.0dB Max
Pass Band Ripple:	1.0dB Max
20 dBc Band Width:	±7.5KHz Max
In Out Impedance:	1K Ohms
Operating Temperature:	0 to +70°C

Outline Drawing:

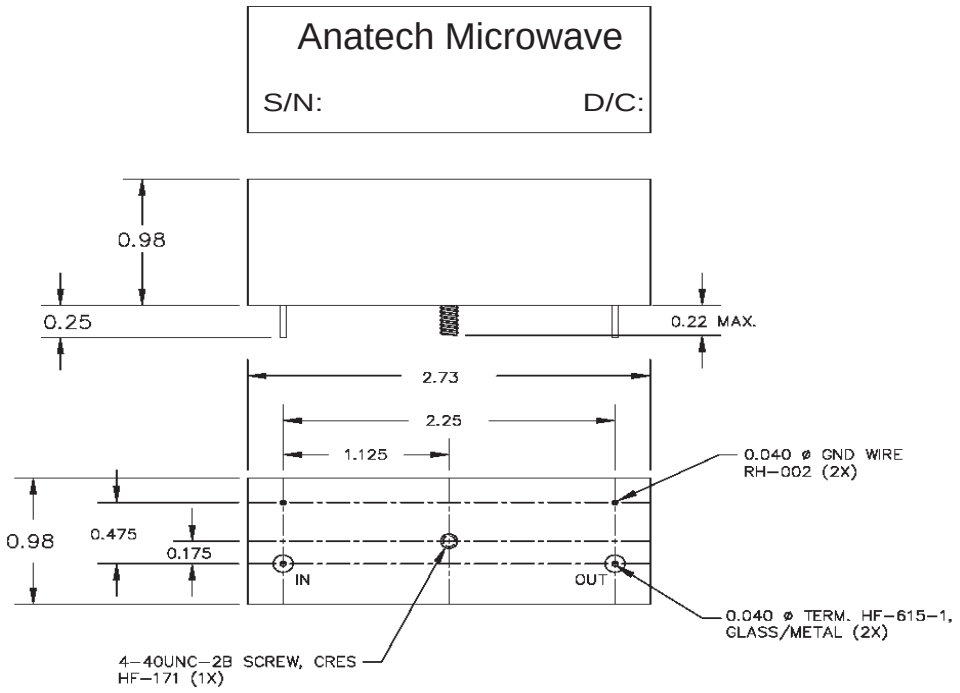

ANATECH ELECTRONICS INC. 70 Outwater Lane, Garfield, NJ 07026 Tel: (973) 772-4242 Fax: (973) 772-4646
E-Mail: sales@anatechelectronics.com Website: www.anatechelectronics.com