Evaluation Board for CFTL-0134 Wideband Tx Modulator Solution

Preliminary Technical Data

CFTL-0134-EVALZ

FEATURES

Self-Contained Board Including:
- **ADF4350 Wideband PLL + VCO**
- **ADL5375 Wideband IQ Modulator**
- **Ultra low-noise voltage regulators, ADP150, ADP3334**
- **25 MHz TCXO Reference,**
- **USB interface,**

Accompanying ADF4350 Software Allows Control of Synthesizer Functions from PC

GENERAL DESCRIPTION

The CFTL-0134-EVALZ is the evaluation board described in the Circuit From the Lab CN-0134, entitled "Broadband Low EVM Direct Conversion Transmitter". A photo of the board is shown below. It contains the ADF4350 synthesizer, the ADL5375 wideband transmit modulator and some ultra-low noise LDOs. The board can be controlled using the ADF4350 programming software. A USB cable is included with the board to connect to a pc USB port.

Additional information including other PLL data sheets, technical notes, articles, and ADISimPLL™ PLL simulation software from Analog Devices, Inc. is available at www.analog.com/pll.

PHOTO OF THE EVALUATION BOARD

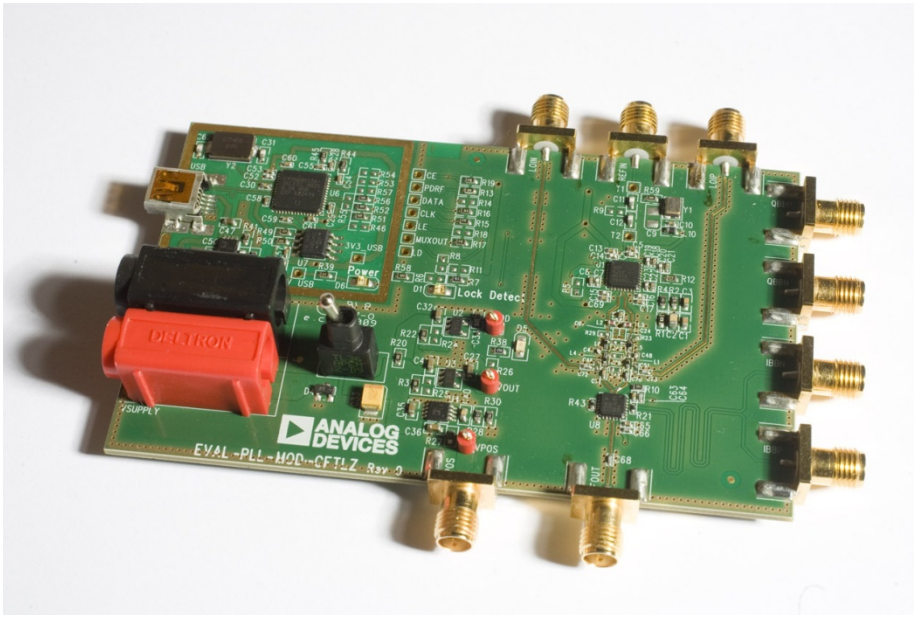

Figure 1.

Rev. A

Evaluation boards are only intended for device evaluation and not for production purposes. Evaluation boards are supplied "as is" and without warranties of any kind, express, implied, or statutory including, but not limited to, any implied warranty of merchantability or fitness for a particular purpose. No license is granted by implication or otherwise under any patents or other intellectual property by application or use of evaluation boards. Information furnished by Analog Devices is believed to be accurate and reliable. However, no responsibility is assumed by Analog Devices for its use, nor for any infringements of patents or other rights of third parties that may result from its use. Analog Devices reserves the right to change devices or specifications at any time without notice. Trademarks and registered trademarks are the property of their respective owners. Evaluation boards are not authorized to be used in life support devices or systems.

One Technology Way, P.O. Box 9106, Norwood, MA 02062-9106, U.S.A.
Tel: 781.329.4700 **www.analog.com**
Fax: 781.461.3113 **©2010 Analog Devices, Inc. All rights reserved.**

TABLE OF CONTENTS

Features 1
General Description 1
Photo of the Evaluation Board 1
Table of Contents 2
Revision History 2
Hardware Description Overview 3
Power Supplies 3
IQ Inputs 3
RF/LO Outputs 3
Loop Filter & Charge Pump Current 3
Reference Source 3
Schematics 4
PCB Layout Screenshot 8
Bill of Materials 9
Software 12
Ordering Guide 12
ESD Caution 13

REVISION HISTORY

1/10—Revision 0: Initial Version
5/10 – Revision A: TCXO changed to 25MHz

HARDWARE DESCRIPTION OVERVIEW

POWER SUPPLIES

The user needs to apply 5.5V to the Vsupply power connectors, ("4 mm banana connectors"). An LED, D6 indicates when USB power is available, and another LED, D5 indicates when the main board is powered. Switch EXT_SW is used to switch in the 5.5V supply.

IQ INPUTS

The ADL5375 has four differential IQ inputs. These are brought out to SMAs and should be connected to an appropriate IQ source like the Rhode & Schwarz AMIQ for example. The dc bias voltage for the IQ inputs should be set at 0.5V.

RF/LO OUTPUTS

The ADL5375 RF output is ac-coupled out to the RFOUT SMA. There are also two LO output SMAs which can be used to view the filtered ADF4350 RF outputs on a spectrum analyser. When connecting to an analyser, the unused LO output should be terminated with a 50Ω termination. When measuring EVM or ACLR, these LO outputs should be disconnected by removing capacitors C72 & C73 so as not to load the circuit.

LOOP FILTER & CHARGE PUMP CURRENT

The loop filter schematic is included in the board schematic on page 4–7.

The default loop filter is set to 16kHz and a charge pump setting of 5mA should be used.

REFERENCE SOURCE

The 25 MHz TCXO from Rakon provides the necessary reference signal. An external REFIN may be used if desired. In this case, the on-board TCXO should be disabled by removing R59. R9 can be populated with 50 Ω to impedance match the evaluation board to the external reference source.

SCHEMATICS

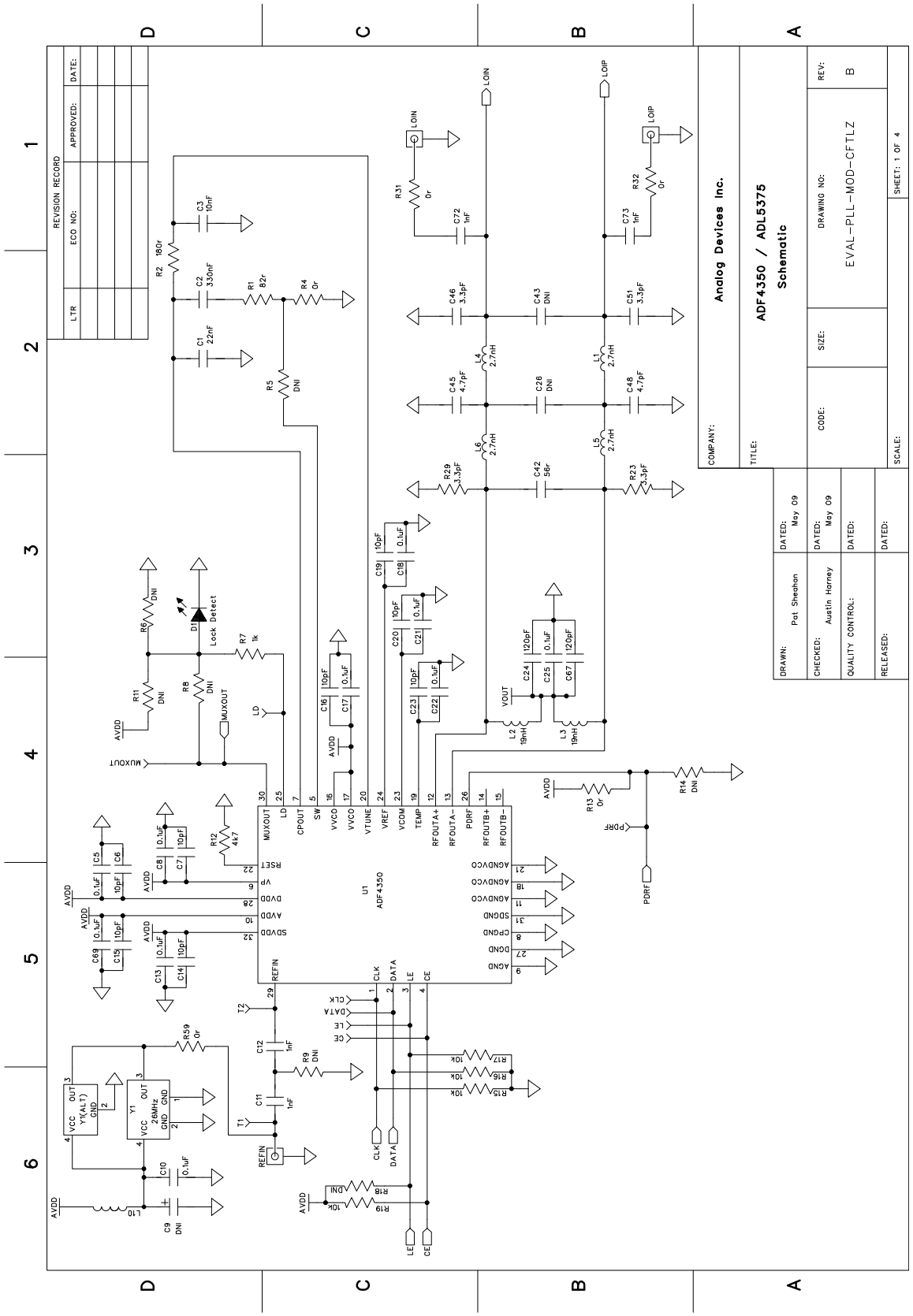
REVISION RECORD
LTR
ECO NO:
APPROVED:
DATE:
COMPANY: Analog Devices Inc.
TITLE: ADF4350 / ADL5375 Schematic
DRAWN: Pat Sheahan
DATED: May 09
CHECKED: Austin Harney
DATED: May 09
QUALITY CONTROL:
DATED:
RELEASED:
DATED:
CODE:
SIZE:
DRAWING NO: EVAL-PLL-MOD-CFTLZ
REV: B
SCALE:
SHEET: 1 OF 4
U1 ADF4350
Y1 26MHz
Y1(ALT)
D1 Lock Detect
LOIN
LOIP
MUXOUT
REFIN
CLK
DATA
LE
CE
VOUT
PDRF

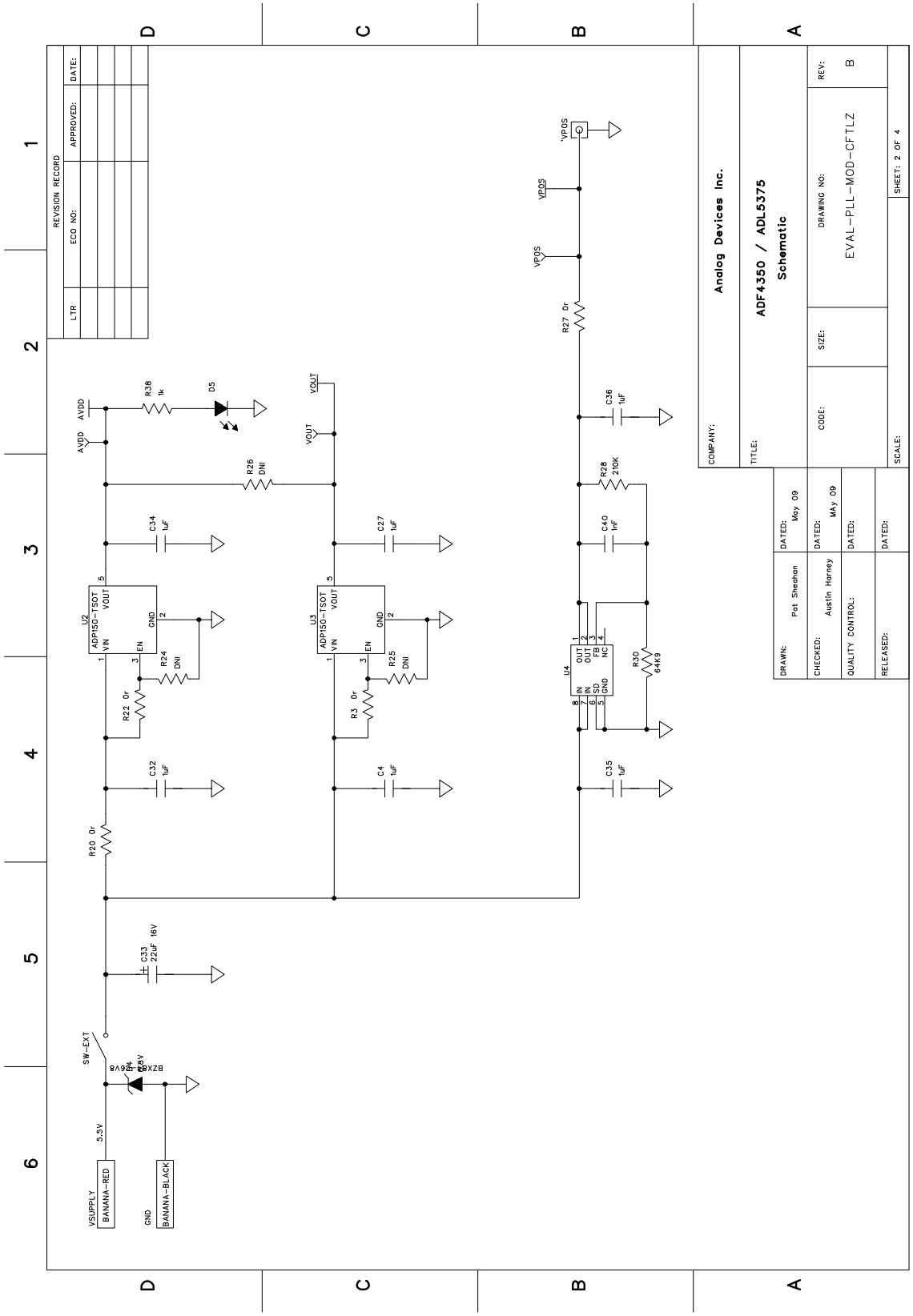
REVISION RECORD
LTR
ECO NO:
APPROVED:
DATE:
COMPANY:
Analog Devices Inc.
TITLE:
ADF4350 / ADL5375
Schematic
CODE:
SIZE:
DRAWING NO:
EVAL-PLL-MOD-CFTLZ
REV:
B
SCALE:
SHEET: 2 OF 4
DRAWN:
Pat Sheahan
DATED:
May 09
CHECKED:
Austin Harney
DATED:
MAY 09
QUALITY CONTROL:
DATED:
RELEASED:
DATED:
VSUPPLY
BANANA-RED
GND
BANANA-BLACK
5.5V
SW-EXT
BZX84-C6V8
R20 0r
C33
22uF 16V
C32
1uF
U2
ADP150-TSOT
VIN
VOUT
EN
GND
R22 0r
R24
DNI
C34
1uF
AVDD
R38
1k
D5
R26
DNI
VOUT
C27
1uF
U3
ADP150-TSOT
R3 0r
R25
DNI
C4
1uF
U4
IN
OUT
FB
NC
SD
R30
64K9
C35
1uF
C40
1nF
R28
210K
C36
1uF
R27 0r
VPOS

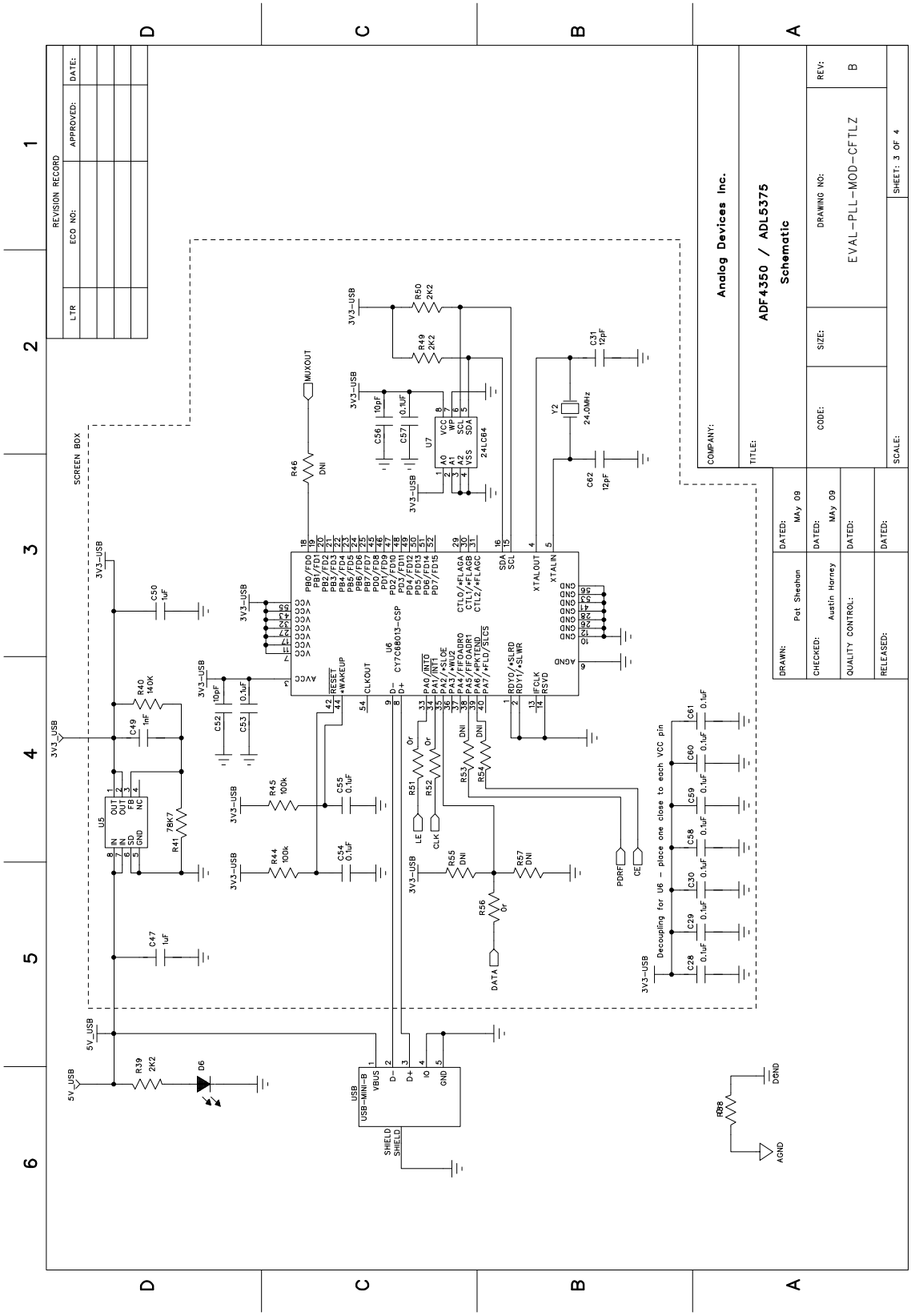
REVISION RECORD
LTR
ECO NO:
APPROVED:
DATE:
SCREEN BOX
Analog Devices Inc.
ADF4350 / ADL5375
Schematic
EVAL-PLL-MOD-CFTLZ
B
SHEET: 3 OF 4
DRAWN: Pat Sheahan
CHECKED: Austin Harney
QUALITY CONTROL:
RELEASED:
DATED: MAy 09
DATED: MAy 09
DATED:
DATED:
COMPANY:
TITLE:
CODE:
SIZE:
DRAWING NO:
REV:
SCALE:
Decoupling for U6 - place one close to each VCC pin
U6
CY7C68013-CSP
U7
24LC64
U5
USB
USB-MINI-B
Y2
24.0MHz
MUXOUT
DATA
PDRF
CE
LE
CLK
3V3_USB
5V_USB
AGND
DGND
SHIELD

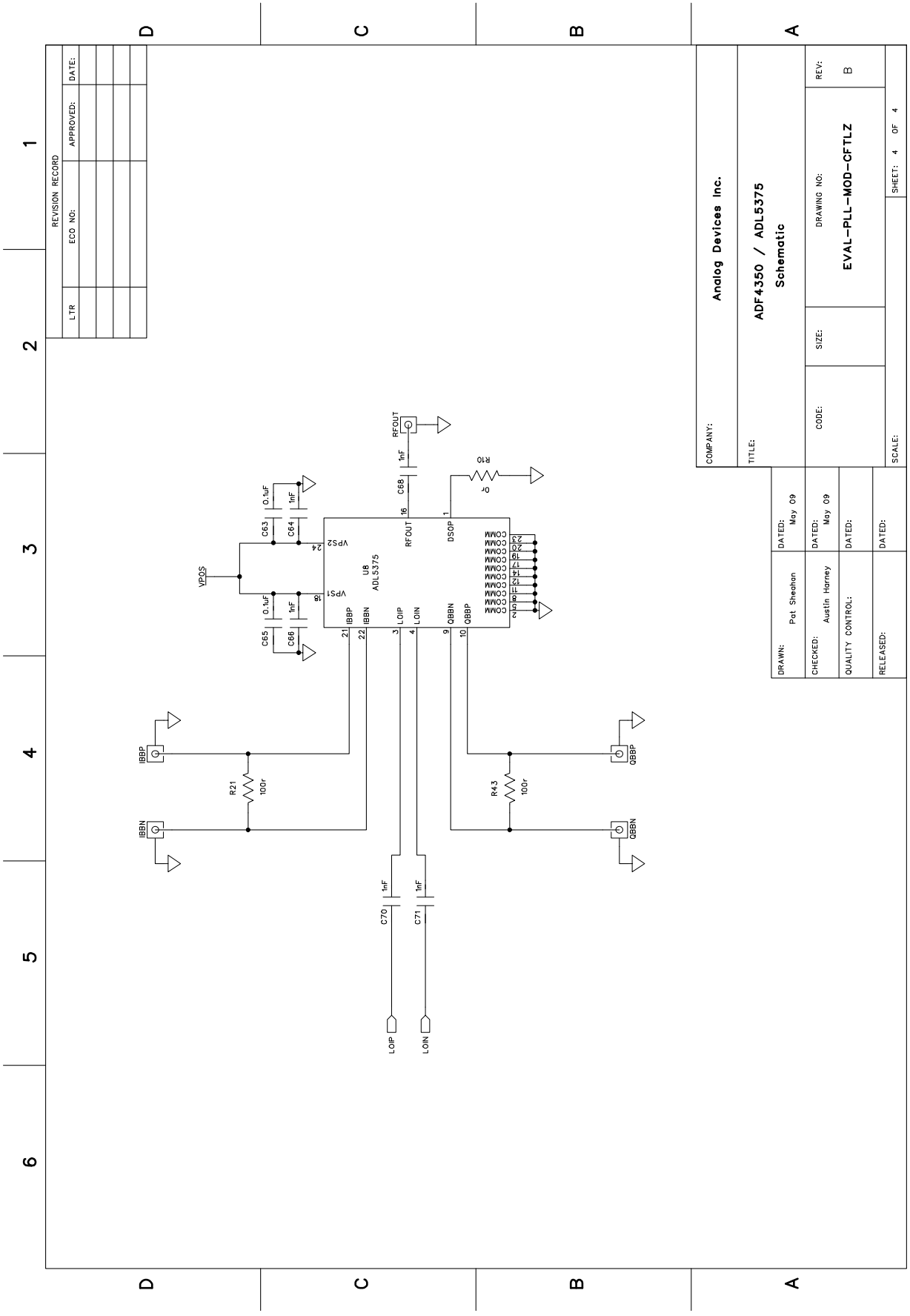
REVISION RECORD
LTR
ECO NO:
APPROVED:
DATE:
COMPANY: Analog Devices Inc.
TITLE: ADF4350 / ADL5375 Schematic
CODE:
SIZE:
DRAWING NO: EVAL-PLL-MOD-CFTLZ
REV: B
SHEET: 4 OF 4
SCALE:
DRAWN: Pat Sheahan DATED: May 09
CHECKED: Austin Harney DATED: May 09
QUALITY CONTROL: DATED:
RELEASED: DATED:
U8 ADL5375
VPS2
VPS1
RFOUT
DSOP
IBBP
IBBN
LOIP
LOIN
QBBN
QBBP
VPOS
C63 0.1uF
C64 1nF
C65 0.1uF
C66 1nF
C68 1nF
C70 1nF
C71 1nF
R10 0r
R21 100r
R43 100r
RFOUT
IBBP
IBBN
QBBP
QBBN
LOIP
LOIN

PCB LAYOUT SCREENSHOT

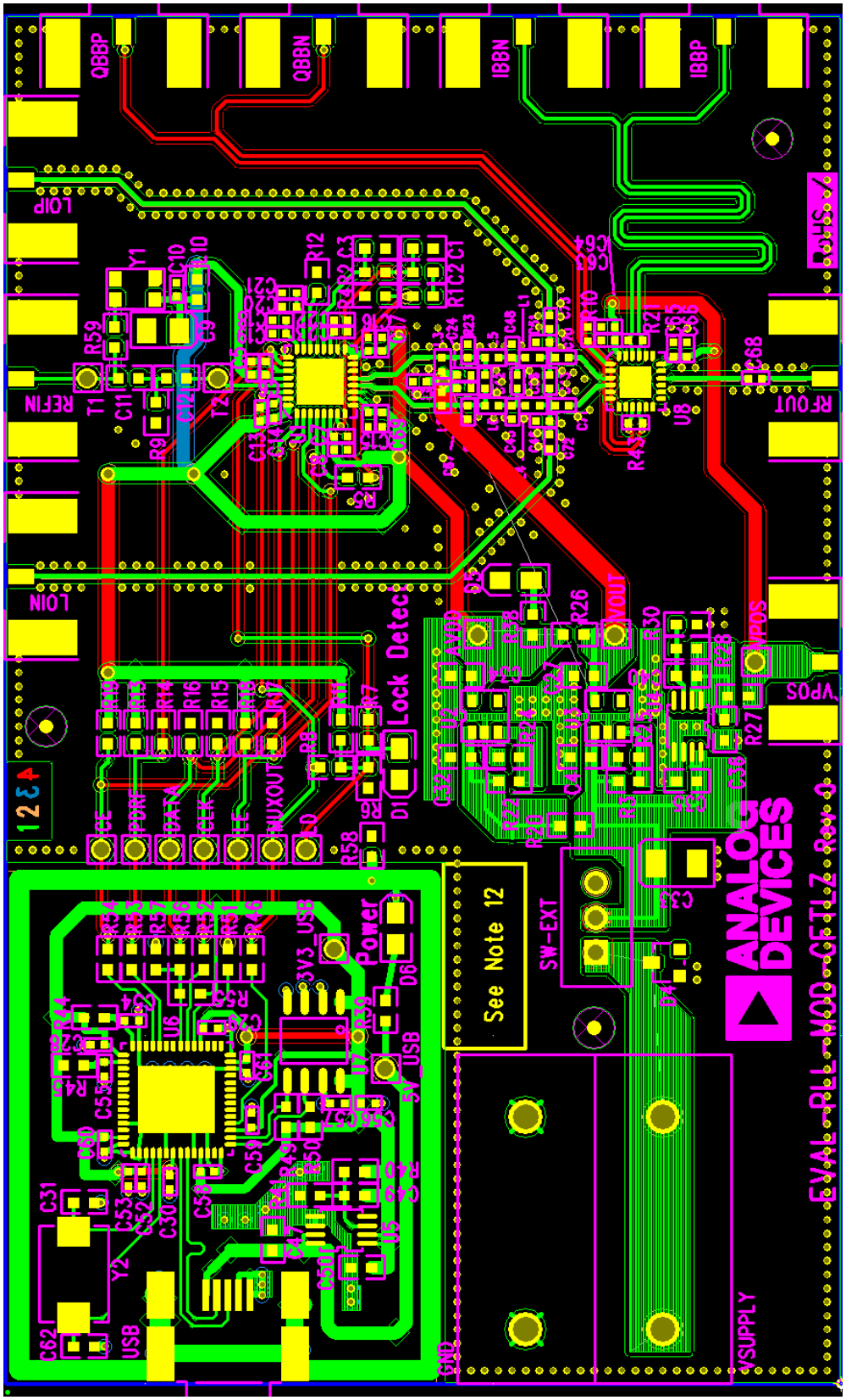

BILL OF MATERIALS

Name	Value	PCB Decal	PART DESC	MFG #1	Part Number
3V3_USB		TESTPOINT	Red Testpoint	Vero	20-313137
5V_USB		TESTPOINT	Red Testpoint	Vero	20-313137
AVDD		TESTPOINT	Red Testpoint	Vero	20-313137
C1	22nF	C0603	50V X7R Ceramic Capacitor	Kemet	C0603C223K5RAC
C2	330nF	C0603	16V X7R Ceramic Capacitor	Kemet	C0603C334K4RAC
C3	10nF	C0603	50V X7R SMD Ceramic Capacitor	Kemet	C0603C103J5RAC-TU
C4	1uF	C0603	CAPACITOR, 0603 1UF 10V X5R	Murata	GRM188R61A105KA61D
C5	0.1uF	C0402	16V, X7R Ceramic Capacitor	Kemet	C0402C104K4RAC
C6	10pF	C0402	50V NP0 Ceramic Capacitor	AVX	04025U100GAT2A
C7	10pF	C0402	50V NP0 Ceramic Capacitor	AVX	04025U100GAT2A
C8	0.1uF	C0402	16V, X7R Ceramic Capacitor	Kemet	C0402C104K4RAC
C9	DNI	RTAJ_A	TAJ-A Capacitor Location - Not inserted	n/a	n/a
C10	0.1uF	C0402	16V, X7R Ceramic Capacitor	Kemet	C0402C104K4RAC
C11	1nF	C0603	50V NP0 Ceramic Capacitor	AVX	06035A102JAT2A
C12	1nF	C0603	50V NP0 Ceramic Capacitor	AVX	06035A102JAT2A
C13	0.1uF	C0402	16V, X7R Ceramic Capacitor	Kemet	C0402C104K4RAC
C14	10pF	C0402	50V NP0 Ceramic Capacitor	AVX	04025U100GAT2A
C15	10pF	C0402	50V NP0 Ceramic Capacitor	AVX	04025U100GAT2A
C16	10pF	C0402	50V NP0 Ceramic Capacitor	AVX	04025U100GAT2A
C17	0.1uF	C0402	16V, X7R Ceramic Capacitor	Kemet	C0402C104K4RAC
C18	0.1uF	C0402	16V, X7R Ceramic Capacitor	Kemet	C0402C104K4RAC
C19	10pF	C0402	50V NP0 Ceramic Capacitor	AVX	04025U100GAT2A
C20	10pF	C0402	50V NP0 Ceramic Capacitor	AVX	04025U100GAT2A
C21	0.1uF	C0402	16V, X7R Ceramic Capacitor	Kemet	C0402C104K4RAC
C22	0.1uF	C0402	16V, X7R Ceramic Capacitor	Kemet	C0402C104K4RAC
C23	10pF	C0402	50V NP0 Ceramic Capacitor	AVX	04025U100GAT2A
C24	120pF	C0402	50V NP0 Ceramic Capacitor	AVX	04025A121JAT2A
C25	0.1uF	C0402	16V, X7R Ceramic Capacitor	Kemet	C0402C104K4RAC
C26	DNI	C0402	50V C0G/NPO GRM15 Series Capacitor	n/a	n/a
C27	1uF	C0603	CAPACITOR, 0603 1UF 10V X5R	Murata	GRM188R61A105KA61D
C28	0.1uF	C0402	16V, X7R Ceramic Capacitor	Kemet	C0402C104K4RAC
C29	0.1uF	C0402	16V, X7R Ceramic Capacitor	Kemet	C0402C104K4RAC
C30	0.1uF	C0402	16V, X7R Ceramic Capacitor	Kemet	C0402C104K4RAC
C31	12pF	C0603	50V NPO SMD Ceramic Capacitor	Phycomp	2238 867 15129
C32	1uF	C0603	CAPACITOR, 0603 1UF 10V X5R	Murata	GRM188R61A105KA61D
C33	22uF 16V	RTAJ_B	Tantalum TAJ-B 22UF 16V 10%	AVX	TAJB226K016RNJ
C34	1uF	C0603	CAPACITOR, 0603 1UF 10V X5R	Murata	GRM188R61A105KA61D
C35	1uF	C0603	CAPACITOR, 0603 1UF 10V X5R	Murata	GRM188R61A105KA61D
C36	1uF	C0603	CAPACITOR, 0603 1UF 10V X5R	Murata	GRM188R61A105KA61D
C40	1nF	C0603	50V X7R Ceramic Capacitor	Kemet	C0603C102K5RAC
C42	56r	C0402	0402 1% Resistor	Multicomp	MC 0.0625W 0402 1% 56
C43	DNI	C0402	50V C0G/NPO GRM15 Series Capacitor	n/a	n/a
C45	4.7pF	C0402	50V C0G/NPO GRM15 Series Capacitor	Johanson Technology	500R07S4R7BV4T
C46	3.3pF	C0402	50V C0G/NPO GRM15 Series Capacitor	Murata	GRM1555C1H3R3CZ01D
C47	1uF	C0603	25V X5R Ceramic Capacitor	Taiyo Yuden	TMK107BJ105KA-T
C48	4.7pF	C0402	50V C0G/NPO GRM15 Series Capacitor	Johanson Technology	500R07S4R7BV4T
C49	1nF	C0603	50V NP0 Ceramic Capacitor	AVX	06035A102JAT2A
C50	1uF	C0603	25V X5R Ceramic Capacitor	Taiyo Yuden	TMK107BJ105KA-T
C51	3.3pF	C0402	50V C0G/NPO GRM15 Series Capacitor	Murata	GRM1555C1H3R3CZ01D
C52	10pF	C0402	50V NP0 Ceramic Capacitor	AVX	04025U100GAT2A
C53	0.1uF	C0402	16V, X7R Ceramic Capacitor	Kemet	C0402C104K4RAC
C54	0.1uF	C0402	16V, X7R Ceramic Capacitor	Kemet	C0402C104K4RAC
C55	0.1uF	C0402	16V, X7R Ceramic Capacitor	Kemet	C0402C104K4RAC
C56	10pF	C0402	50V NP0 Ceramic Capacitor	AVX	04025U100GAT2A
C57	0.1UF	C0402	16V, X7R Ceramic Capacitor	Kemet	C0402C104K4RAC
C58	0.1uF	C0402	16V, X7R Ceramic Capacitor	Kemet	C0402C104K4RAC
C59	0.1uF	C0402	16V, X7R Ceramic Capacitor	Kemet	C0402C104K4RAC
C60	0.1uF	C0402	16V, X7R Ceramic Capacitor	Kemet	C0402C104K4RAC
C61	0.1uF	C0402	16V, X7R Ceramic Capacitor	Kemet	C0402C104K4RAC
C62	12pF	C0603	50V NPO SMD Ceramic Capacitor	Phycomp	2238 867 15129
C63	0.1uF	C0402	16V, X7R Ceramic Capacitor	Kemet	C0402C104K4RAC
C64	1nF	C0402	CAP CER 1000PF 50V C0G 0402	Murata	GRM1555C1H102JA01D
C65	0.1uF	C0402	16V, X7R Ceramic Capacitor	Kemet	C0402C104K4RAC
C66	1nF	C0402	CAP CER 1000PF 50V C0G 0402	Murata	GRM1555C1H102JA01D
C67	120pF	C0402	50V NP0 Ceramic Capacitor	AVX	04025A121JAT2A
C68	1nF	C0402	CAP CER 1000PF 50V C0G 0402	Murata	GRM1555C1H102JA01D
C69	0.1uF	C0402	16V, X7R Ceramic Capacitor	Kemet	C0402C104K4RAC
C70	1nF	C0402	CAP CER 1000PF 50V C0G 0402	Murata	GRM1555C1H102JA01D
C71	1nF	C0402	CAP CER 1000PF 50V C0G 0402	Murata	GRM1555C1H102JA01D
C72	1nF	C0402	50V C0G/NPO GRM15 Series Capacitor	Murata	GRM1555C1H102JA01D
C73	1nF	C0402	50V C0G/NPO GRM15 Series Capacitor	Murata	GRM1555C1H102JA01D

CE		TESTPOINT	Red Testpoint	Vero	20-313137
CLK		TESTPOINT	Red Testpoint	Vero	20-313137
D1		LED-0805	Green LED	Avago Technologies	HSMG-C170
D4	6.8V	SOT23	Zener Diode, 6.8V, 350MW	Fairchild	BZX84-C6V8
D5		LED-0805	RED LED	Avago Technologies	HSMS-C170
D6		LED-0805	Green LED	Avago Technologies	HSMG-C170
DATA		TESTPOINT	Red Testpoint	Vero	20-313137
GND		BANANA	Black 4mm Banana Socket	Deltron	571-0100-01
IBBN		SMA_CARD_EDGE_RF	End-Launch 50r SMA Jack	Emerson Network	142-0701-851
IBBP		SMA_CARD_EDGE_RF	End-Launch 50r SMA Jack	Emerson Network	142-0701-851
L1	2.7nH	L0402	0r resistor	Coilcraft	0402CS-2N7X_LU
L2	19nH	L0402	Chip Inductor 0402CS Series	Coilcraft	0402CS-19NX_LU
L3	19nH	L0402	Chip Inductor 0402CS Series	Coilcraft	0402CS-19NX_LU
L4	2.7nH	L0402	0r resistor	Coilcraft	0402CS-2N7X_LU
L5	2.7nH	L0402	0r resistor	Coilcraft	0402CS-2N7X_LU
L6	2.7nH	L0402	0r resistor	Coilcraft	0402CS-2N7X_LU
L10	470r @ 100MHz	L0603	Ferrite Bead	Wuerth Elektronik	7427-92642
LD		TESTPOINT	Red Testpoint	Vero	20-313137
LE		TESTPOINT	Red Testpoint	Vero	20-313137
LOIN		SMA_CARD_EDGE_RF	End-Launch 50r SMA Jack	Emerson Network	142-0701-851
LOIP		SMA_CARD_EDGE_RF	End-Launch 50r SMA Jack	Emerson Network	142-0701-851
MUXOUT		TESTPOINT	Red Testpoint	Vero	20-313137
PDRF		TESTPOINT	Red Testpoint	Vero	20-313137
QBBN		SMA_CARD_EDGE_RF	End-Launch 50r SMA Jack	Emerson Network	142-0701-851
QBBP		SMA_CARD_EDGE_RF	End-Launch 50r SMA Jack	Emerson Network	142-0701-851
R1	82r	R0603	SMD Resistor	Multicomp	MC 0.063W 0603 82R
R2	180r	R0603	SMD Resistor	Multicomp	MC 0.063W 0603 180r
R3	0r	R0603	SMD Resistor	Multicomp	MC 0.063W 0603 0R
R4	0r	R0603	SMD Resistor	Multicomp	MC 0.063W 0603 0R
R5	DNI	R0603	0603 Resistor Location - Not Inserted	n/a	n/a
R6	DNI	R0603	0603 Resistor Location - Not Inserted	n/a	n/a
R7	1k	R0603	SMD Resistor	Multicomp	MC 0.063W 0603 1K
R8	DNI	R0603	0603 Resistor Location - Not Inserted	n/a	n/a
R9	DNI	R0603	0603 Resistor Location - Not Inserted	n/a	n/a
R10	0r	R0402	SMD Resistor	Multicomp	MC 0.063W 0603 0R
R11	DNI	R0603	0603 Resistor Location - Not Inserted	n/a	n/a
R12	4k7	R0603	SMD Resistor	Multicomp	MC 0.063W 0603 4k7
R13	0r	R0603	SMD Resistor	Multicomp	MC 0.063W 0603 0R
R14	DNI	R0603	0603 Resistor Location - Not Inserted	n/a	n/a
R15	10k	R0603	SMD Resistor	Multicomp	MC 0.063W 0603 10K
R16	10k	R0603	SMD Resistor	Multicomp	MC 0.063W 0603 10K
R17	10k	R0603	SMD Resistor	Multicomp	MC 0.063W 0603 10K
R18	DNI	R0603	0603 Resistor Location - Not Inserted	n/a	n/a
R19	10k	R0603	SMD Resistor	Multicomp	MC 0.063W 0603 10K
R20	0r	R0603	SMD Resistor	Multicomp	MC 0.063W 0603 0R
R21	100r	R0402	SMD Resistor	Multicomp	0402WGF1000TCE
R22	0r	R0603	SMD Resistor	Multicomp	MC 0.063W 0603 0R
R23	3.3pF	C0402	50V C0G/NPO GRM15 Series Capacitor	Murata	GRM1555C1H3R3CZ01D
R24	DNI	R0603	0603 Resistor Location - Not Inserted	n/a	n/a
R25	DNI	R0603	0603 Resistor Location - Not Inserted	n/a	n/a
R26	DNI	R0603	0603 Resistor Location - Not Inserted	n/a	n/a
R27	0r	R0603	SMD Resistor	Multicomp	MC 0.063W 0603 0R
R28	210K	R0603	SMD Resistor	Multicomp	MC 0.063W 0603 210K
R29	3.3pF	C0402	50V C0G/NPO GRM15 Series Capacitor	Murata	GRM1555C1H3R3CZ01D
R30	64K9	R0603	SMD Resistor	Multicomp	MC 0.063W 0603 64K9
R31	0r	R0402	SMD Resistor	Multicomp	MC 0.063W 0402 0R
R32	0r	R0402	SMD Resistor	Multicomp	MC 0.063W 0402 0R
R38	1k	R0603	SMD Resistor	Multicomp	MC 0.063W 0603 1K
R39	2K2	R0603	SMD Resistor	Multicomp	MC 0.063W 0603 2k2
R40	140K	R0603	SMD Resistor	Multicomp	MC 0.063W 0603 1% 140K
R41	78K7	R0603	SMD Resistor	Multicomp	MC 0.063W 0603 1% 78K7
R43	100r	R0402	SMD Resistor	Multicomp	0402WGF1000TCE
R44	100k	R0603	SMD Resistor	Multicomp	MC 0.063W 0603 100K
R45	100k	R0603	SMD Resistor	Multicomp	MC 0.063W 0603 100K
R46	DNI	R0603	0603 Resistor Location - Not Inserted	n/a	n/a

R49	2K2	R0603	SMD Resistor	Multicomp	MC 0.063W 0603 2k2
R50	2K2	R0603	SMD Resistor	Multicomp	MC 0.063W 0603 2k2
R51	0r	R0603	SMD Resistor	Multicomp	MC 0.063W 0603 0R
R52	0r	R0603	SMD Resistor	Multicomp	MC 0.063W 0603 0R
R53	DNI	R0603	0603 Resistor Location - Not Inserted	n/a	n/a
R54	DNI	R0603	0603 Resistor Location - Not Inserted	n/a	n/a
R55	DNI	R0603	0603 Resistor Location - Not Inserted	n/a	n/a
R56	0r	R0603	SMD Resistor	Multicomp	MC 0.063W 0603 0R
R57	DNI	R0603	0603 Resistor Location - Not Inserted	n/a	n/a
R58	0r	R0603	SMD Resistor	Multicomp	MC 0.063W 0603 0R
R59	0r	R0603	SMD Resistor	Multicomp	MC 0.063W 0603 0R
REFIN		SMA_CARD_EDGE_RF	End-Launch 50r SMA Jack	Emerson Network	142-0701-851
RFOUT		SMA_CARD_EDGE_RF	End-Launch 50r SMA Jack	Emerson Network	142-0701-851
SW-EXT		SW_SIP-3P	PCB Mount SPDT Switch	APEM	TL36P0050
T1		TESTPOINT	Red Testpoint	Vero	20-313137
T2		TESTPOINT	Red Testpoint	Vero	20-313137
U1		LFCSP-32	PLL	Analog Devices	ADF4350BCPZ
U2		TSOT-5	Linear regulator	Analog Devices	ADP150AUJZ-3.3
U3		TSOT-5	Linear regulator	Analog Devices	ADP150AUJZ-3.3
U4		MSO8	Adjustable LDO Regulator	Analog Devices	ADP3334ARMZ
U5		MSO8	Adjustable LDO Regulator	Analog Devices	ADP3334ARMZ
U6		LFCSP-56_RP	USB Microcontroller	Cypress Semiconductor	CY7C68013A-56LFXC
U7		SO8NB	64K I2C Serial EEPROM	Microchip Technology	24LC64-ISN
U8		LFCSP-24	Broadband Quadrature Modulator	Analog Devices	ADL5375-05ACPZ-WP
USB		USB-MINI-B	USB Mini-B Connector (usb-otg)	Molex	54819-0578
VOUT		TESTPOINT	Red Testpoint	Vero	20-313137
VPOS		TESTPOINT	Red Testpoint	Vero	20-313137
VSUPPLY		BANANA	Red 4mm Banana Socket	Deltron	571-0500-01
Y1	26MHz	TCXO-IT3200C	TCXO	Rakon	IT3205CE 26MHZ
Y1(ALT)	10MHz	OSC_TCXO	SMD Temperature Compensated Crystal O	Rakon	TXO200B
Y2	24.0MHz	XTAL-CSM-8A	SMD Crystal	ECS International	ECS-240-12-20A-TR
`VPOS		SMA_CARD_EDGE_RF	End-Launch 50r SMA Jack	Emerson Network	142-0701-851

SOFTWARE

The control software for CFTL-0134-EVALZ uses the standard ADF4350 programming software. This is on the CD which accompanies the board. If the user clicks on "setup.exe", then the install wizard guides the user through the install process. Simply follow the on-screen instructions. The software will be installed in a default directory called "C:/Program Files/Analog Devices/ADF4350". To run the software, click on the .exe file.

The Main Interface Window will appear. This is shown below in Figure 3. First make sure "USB OK" is displayed. Otherwise the software has no connection to the evaluation board. Check the cable connection and USB drivers are correctly installed.

Before exiting the software disconnect the USB by clicking disconnect USB button. When disconnected the board is offline and no data is sent to the part. When the board is connected again, click USB connect button to re-enable programming. The above steps will prevent the PC from freezing up.

The default settings on the software **need to be changed** when used with the CFTL-0134-EVALZ board. The Reference frequency should be changed from 10MHz to 25MHz. It should be then possible, with the 5.5V supply applied, to simply hit the "Update All" button and view the VCO output signal on a spectrum analyser at 1000MHz. The charge pump current (Icp)should also be updated to 5mA.

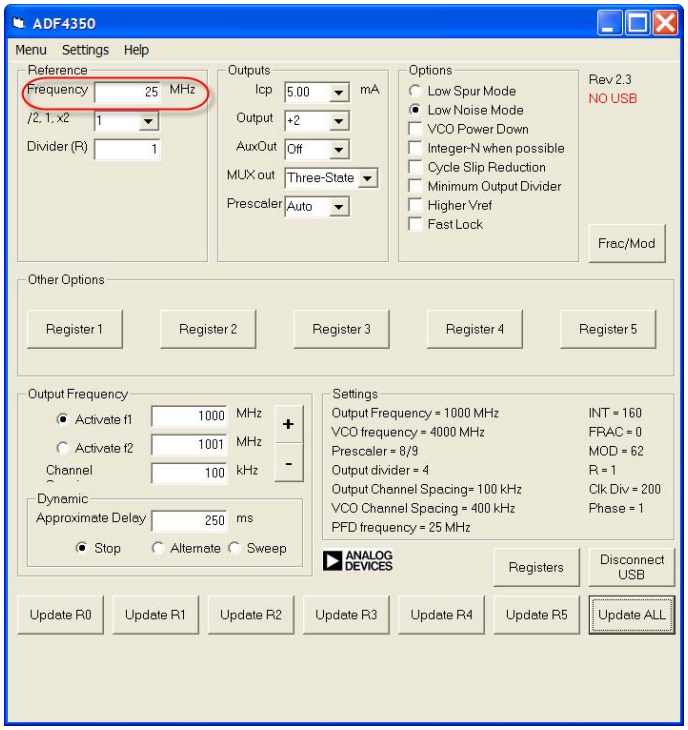

Figure 3. Software Front Panel

[1] Z = RoHS Compliant Part.

ORDERING GUIDE

Model	Description
CFTL-0134-EVALZ [1]	Evaluation Board

ESD CAUTION

ESD (electrostatic discharge) sensitive device. Charged devices and circuit boards can discharge without detection. Although this product features patented or proprietary protection circuitry, damage may occur on devices subjected to high energy ESD. Therefore, proper ESD precautions should be taken to avoid performance degradation or loss of functionality.

NOTES

NOTES

©2009 Analog Devices, Inc. All rights reserved. Trademarks and registered trademarks are the property of their respective owners.
EB08009-0-4/09(0)