DEMO CIRCUIT 1073
QUICK START GUIDE

LT3845

High Voltage Synchronous Buck Controller with Programmable Frequency and Sync

DESCRIPTION

Demonstration Circuit 1073 is a 100kHz-500kHz programmable frequency, high voltage, current-mode DC/DC step-down converter featuring the LT3845. The operating frequency can be synchronized up to 600kHz. The demo board is designed for 12V @ 6.25A (75W) output from a 20V to 55V input. A soft-start feature controls the output voltage slew rate at start-up, reducing current surges and voltage overshoots. The modes of operation (Burst Mode, Discontinuous Current Mode and Continuous Current Mode) are jumper selectable. Both Burst Mode and Discontinuous Current Mode increase the efficiency at light loads. Continuous Current Mode will maintain a constant switching frequency regardless of the load current.

An Optional Boost Bias circuit is provided on the bottom side of the board for back-driving the LT3845 internal regulator from the output voltage. Customers may want to use this optional circuit with modified applications that have relatively high input voltages and low (~ 3.3V) output voltages. In such applications, the optional circuit can increase the overall efficiency by reducing the power loss in the LT3845. The demonstration board has also been laid out with the option of doubling the switching MOSFETs to facilitate higher output current. This board is suitable for a wide range of industrial control systems and particularly suitable for 12V/42V automotive applications and 48V Telecom power supplies.

The LT3845 datasheet gives a complete description of the part, operation and application information. The datasheet must be read in conjunction with this quick start guide for demo circuit 1073.

Note: It is best to ground the SYNC pin if the SYNC function is not being used.

Design files for this circuit board are available. Call the LTC factory.

Performance Summary (T_A = 25°C)

PARAMETER FOR STEP-DOWN CONVERTER	CONDITION	VALUE
Minimum input voltage		20V
Maximum input voltage		55V
Output voltage V_{OUT}		12V +/- 4%
Maximum output current		6.25A
Typical switching frequency		300kHz

QUICK START PROCEDURE

Demonstration circuit 1073 is easy to set up to evaluate the performance of the LT3845. Refer to Figure 1 for proper measurement equipment setup and follow the procedure below:

NOTE. When measuring the input or output voltage ripple, care must be taken to avoid a long ground lead on the oscilloscope probe. Measure the input or output voltage ripple by touching the probe tip directly across the Vin or Vout and GND terminals. See Figure 2 for proper scope probe technique.

1. Place JP1 on the RUN position:
2. With power off, connect the input power supply to Vin and GND.
3. Turn on the power at the input.

   NOTE. Make sure that the input voltage does not exceed 60V.
4. Check for the proper output voltages. .
5. Once the proper output voltages are established, adjust the loads within the operating range and observe the output voltage regulation, ripple voltage, efficiency and other parameters.

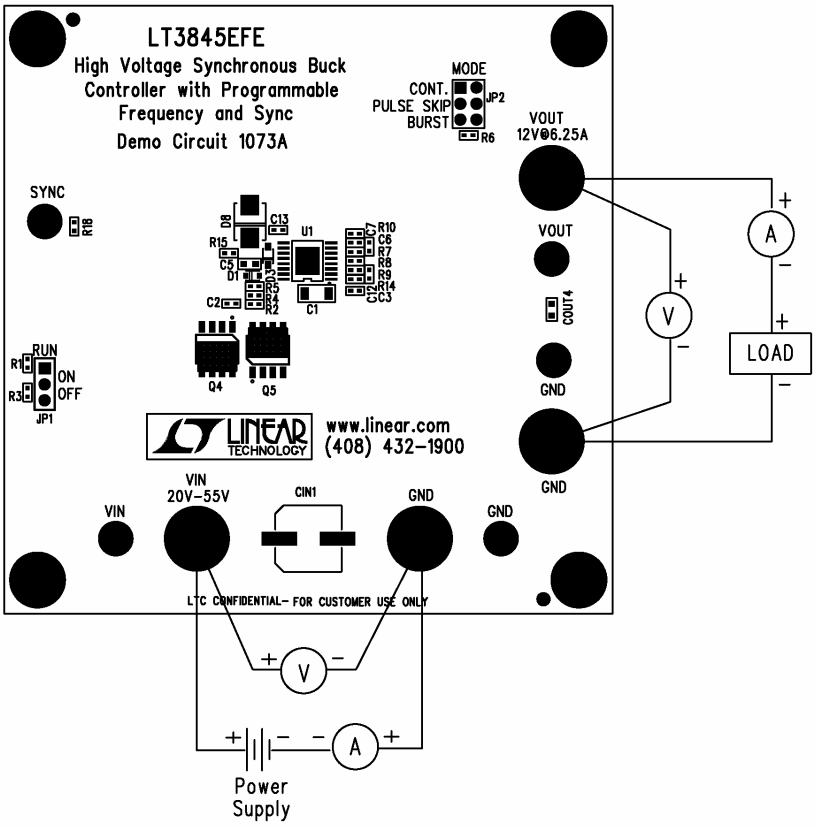

Figure 1. Proper Measurement Equipment Setup

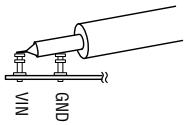

Figure 2. Measuring Input or Output Ripple

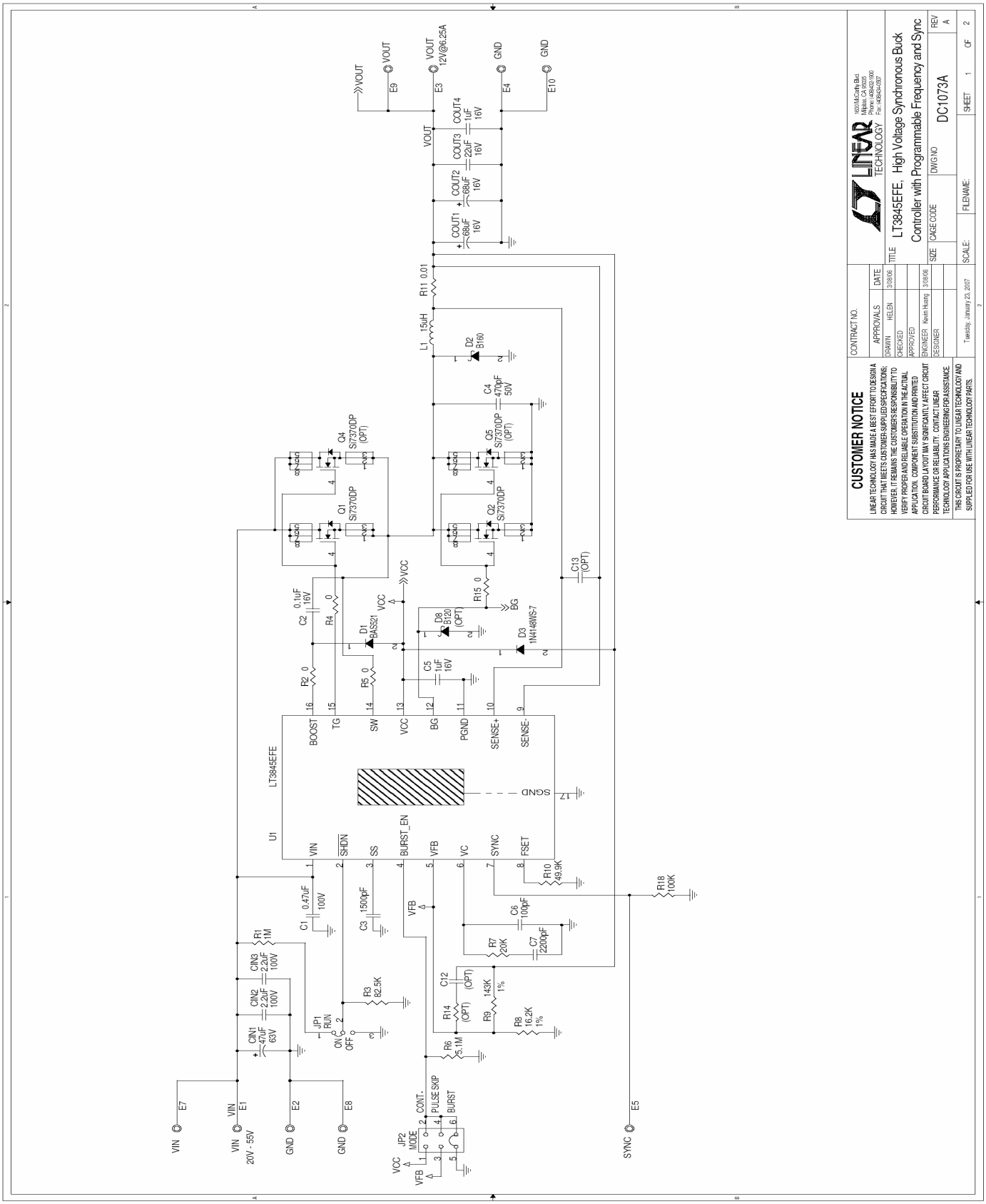
CUSTOMER NOTICE
LINEAR TECHNOLOGY HAS MADE A BEST EFFORT TO DESIGN A CIRCUIT THAT MEETS CUSTOMER-SUPPLIED SPECIFICATIONS; HOWEVER, IT REMAINS THE CUSTOMER'S RESPONSIBILITY TO VERIFY PROPER AND RELIABLE OPERATION IN THE ACTUAL APPLICATION. COMPONENT SUBSTITUTION AND PRINTED CIRCUIT BOARD LAYOUT MAY SIGNIFICANTLY AFFECT CIRCUIT PERFORMANCE OR RELIABILITY. CONTACT LINEAR TECHNOLOGY APPLICATIONS ENGINEERING FOR ASSISTANCE.
THIS CIRCUIT IS PROPRIETARY TO LINEAR TECHNOLOGY AND SUPPLIED FOR USE WITH LINEAR TECHNOLOGY PARTS.
CONTRACT NO.
APPROVALS
DATE
DRAWN HELEN 3/18/06
CHECKED
APPROVED
ENGINEER Kevin Huang 3/18/06
DESIGNER
Tuesday, January 23, 2007
LINEAR TECHNOLOGY
1630 McCarthy Blvd.
Milpitas, CA 95035
Phone: (408) 432-1900
Fax: (408) 434-0507
TITLE
LT3845EFE, High Voltage Synchronous Buck Controller with Programmable Frequency and Sync
SIZE
CAGE CODE
DWG NO
DC1073A
REV A
SCALE:
FILENAME:
SHEET 1 OF 2
U1
LT3845EFE
VIN
SHDN
SS
BURST_EN
VFB
VC
SYNC
FSET
BOOST
TG
SW
VCC
BG
PGND
SENSE+
SENSE-
SGND
VIN 20V - 55V
GND
VOUT
VOUT 12V@6.25A
SYNC
CONT.
PULSE SKIP
BURST
MODE
JP1 RUN
ON
OFF
JP2
Q1 SI7370DP
Q2 SI7370DP
Q4 SI7370DP (OPT)
Q5 SI7370DP (OPT)
D1 BAS521
D2 B160
D3 1N4148WS-7
D8 B120 (OPT)
L1 .15uH
R11 0.01
R15 0
R10 49.9K
R18 100K
R7 20K
R9 143K 1%
R8 16.2K 1%
R6 5.1M
R14 (OPT)
R3 82.5K
R1 1M
R2 0
R4 0
R5 0
C1 0.47uF 100V
C2 0.1uF 16V
C3 1500pF
C4 470pF 50V
C5 1uF 16V
C6 100pF
C7 2200pF
C12 (OPT)
C13 (OPT)
CIN1 47uF 63V
CIN2 2.2uF 100V
CIN3 2.2uF 100V
COUT1 68uF 16V
COUT2 68uF 16V
COUT3 22uF 16V
COUT4 1uF 16V

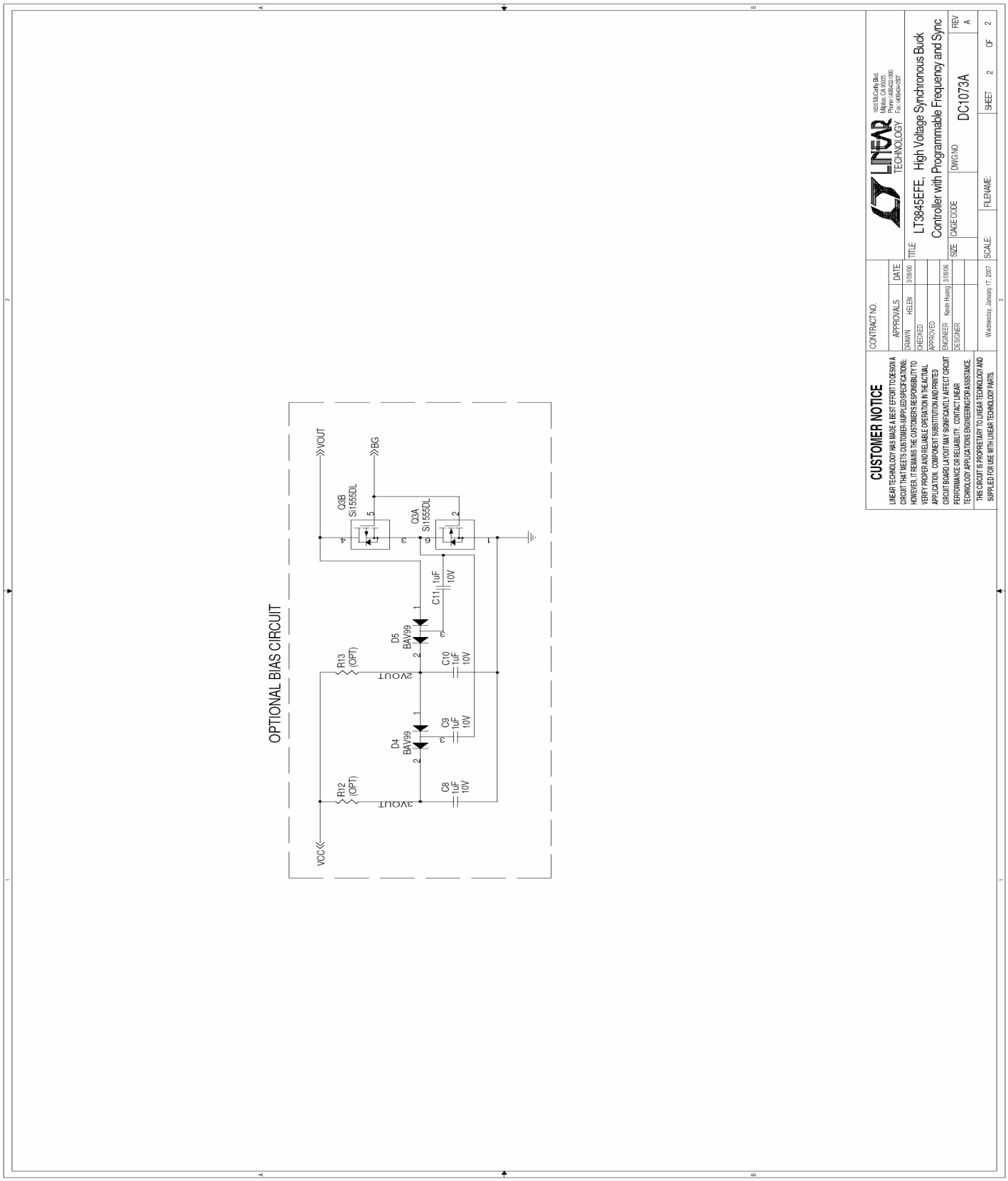
OPTIONAL BIAS CIRCUIT
VCC
VOUT
BG
R12 (OPT)
R13 (OPT)
3VOUT
2VOUT
D4 BAV99
D5 BAV99
C8 1uF 10V
C9 1uF 10V
C10 1uF 10V
C11 1uF 10V
Q3A SI1555DL
Q3B SI1555DL
CUSTOMER NOTICE
LINEAR TECHNOLOGY HAS MADE A BEST EFFORT TO DESIGN A CIRCUIT THAT MEETS CUSTOMER-SUPPLIED SPECIFICATIONS; HOWEVER, IT REMAINS THE CUSTOMER'S RESPONSIBILITY TO VERIFY PROPER AND RELIABLE OPERATION IN THE ACTUAL APPLICATION. COMPONENT SUBSTITUTION AND PRINTED CIRCUIT BOARD LAYOUT MAY SIGNIFICANTLY AFFECT CIRCUIT PERFORMANCE OR RELIABILITY. CONTACT LINEAR TECHNOLOGY APPLICATIONS ENGINEERING FOR ASSISTANCE.
THIS CIRCUIT IS PROPRIETARY TO LINEAR TECHNOLOGY AND SUPPLIED FOR USE WITH LINEAR TECHNOLOGY PARTS.
CONTRACT NO.
APPROVALS
DATE
DRAWN HELEN 3/08/06
CHECKED
APPROVED
ENGINEER Kevin Huang 3/08/06
DESIGNER
Wednesday, January 17, 2007
LINEAR TECHNOLOGY
1630 McCarthy Blvd.
Milpitas, CA 95035
Phone: (408)432-1900
Fax: (408)434-0507
TITLE
LT3845EFE, High Voltage Synchronous Buck Controller with Programmable Frequency and Sync
SIZE
CAGE CODE
DWG NO
DC1073A
REV A
SCALE:
FILENAME:
SHEET 2 OF 2