DWG. NO. JK-3195-A REV. "-"

PART NO.: RH1039XXXXXGNL

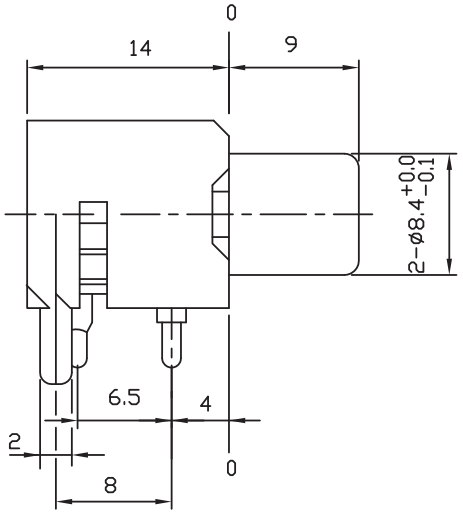

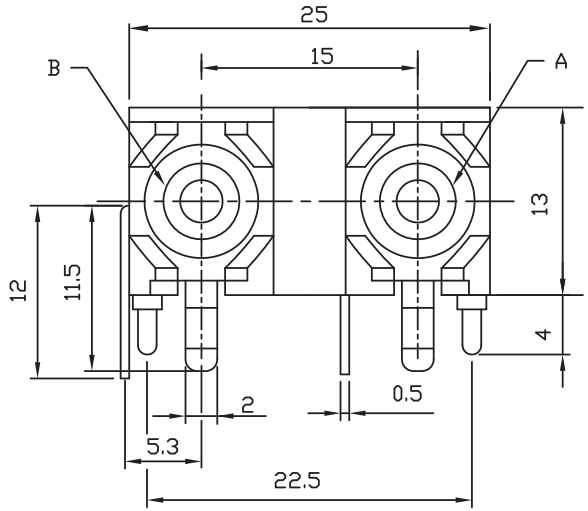

(NOTE: PART AS SHOWN FOR SCHEMATIC -02- ONLY)

ORDER GUIDE:

SERIES No.		010	020	030	040	050	060	070	080
COLOR B=BLACK O=ORANGE R=RED W=WHITE Y=YELLOW	A	R	B	R	W	W	O	W	Y
	B	W	B	B	R	Y	O	Y	W
SCHEMATIC		04		03		02		023	

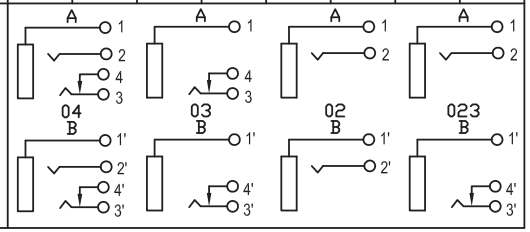

SPECIFICATION:

1. ENVIRONMENT CONDITION:
A. ENVIRONMENT TEMPERATURE: -40°C ~ +70°C.
B. RELATIVE HUMIDITY: <98%RH, +40°C

2. MAIN SPECIFICATION:
A. CURRENT AND VOLTAGE RATING: 0.5A @ 50V AC
B. CONTACT RESISTANCE: INITIAL/20m OHM MAX.
AFTER TEST/50m OHM MAX.
C. INSULATION RESISTANCE: 500M OHM MIN. (DRY CONDITION), 50M OHM MIN(100% RELATIVE HUMIDITY AFTER 96 HRS @70°C).
D. WITHSTANDING VOLTAGE: 1,000V AC (50Hz) FOR 1 MINUTE.
E. INSERT OR PULL FORCE: 200~2,500gf
F. MECHANICAL LIFE: 1,000 CYCLES MIN

NOTES:
1. PLASTIC HOUSING & INSERT: PBT 94V-0
2. SOLDERING TEMP.: 260± 5°C FOR 5±1 SECOND
3. ALL DIMS ARE GIVEN IN MM.

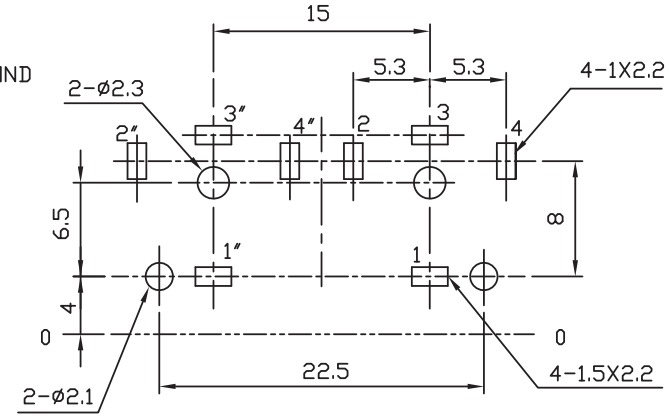

ITEM	NAME	DESCRIPTION	Q'TY
4	BARREL	BRASS H64 GOLD PLATING 0.4M	2
3	RING	PBT 94V-0(FOR COLOR SEE ORDER GUIDE)	2
2	HOUSING	PBT 94V-0	1
1	1# TERMINAL	QSn6.5-0.1 SILVER PLATING 0.45Y	2

ORDERING INFO:

EX. ORDER NUMBER:

P/N: RH1039 XXX XX G NL

- NL — RoHS COMPLIANT "NL"
- G — PLATING OPTION GOLD BARREL
- XX — SCHEMATIC NO.
- XXX — COLOR OPTION
- RH1039 — SERIES No.

PCB LAYOUT (TOP VIEW)

MOUNTING HOLES AS SHOWN FOR SCHEMATIC -04- ONLY (WITH MOST HOLES).
FOR 03, 02, 023 OPTIONS MUST ELIMINATE SOME HOLES ACCORDING RELATED SCHEMATIC

ECN#	DATE	SYM	REVISION RECORD	AUTH	BY

PROJECTION

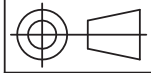

RDI Research Development Innovation

RDI, Inc. 400 Columbus Avenue Valhalla, NY 10595

SCALE NONE	TITLE JACK-RoHS COMPLIANT			
TOLERANCE EXCEPT AS NOTED	DR. JY	DATE 05/06/07	REF. P/N: RH1039XXXXXGNL	
DEC. INCHES N/A	CK. Bill	PRE- JK	DRAWING NO. 3195	SIZE A / REV. -
DEC. MILLIMETERS ±0.10				
ANG. 0°-0.5°				

THIS DOCUMENT IS OWNED BY, AND THE INFORMATION CONTAINED IN IT IS PROPRIETARY TO, RDI, BY RECEIPT HEREOF THE HOLDER AGREES NOT TO USE THE INFORMATION AND NOT TO DISCLOSE IT TO ANY THIRD PARTY, NOR REPRODUCE THIS DOCUMENT WITHOUT THE WRITTEN CONSENT OF RDI, AND AGREES TO RETURN THIS DOCUMENT FORTHWITH UPON REQUEST.