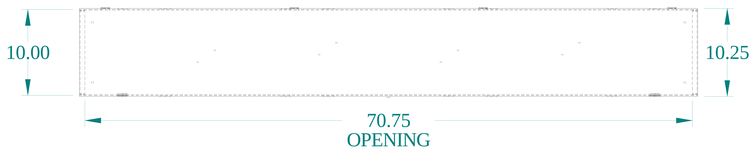

TOP VIEW

SECTION W-W

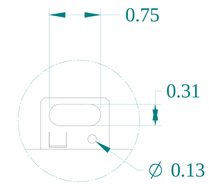

DETAIL Z
TYP

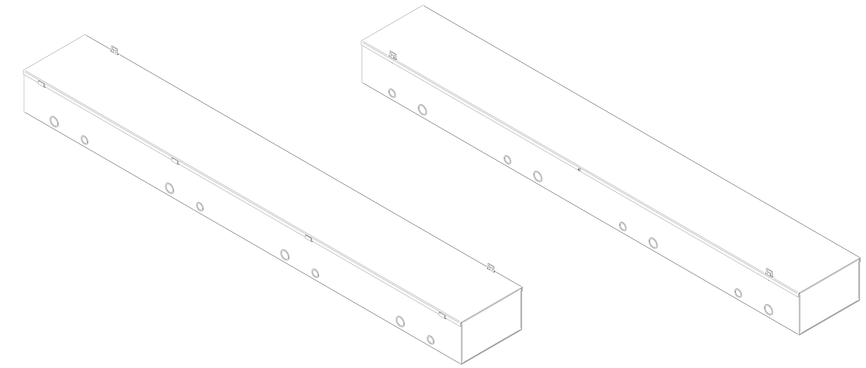

ISOMETRIC VIEWS

SIDE VIEW

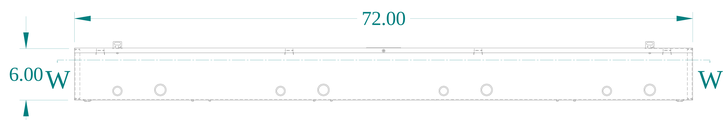

FRONT VIEW

SIDE VIEW

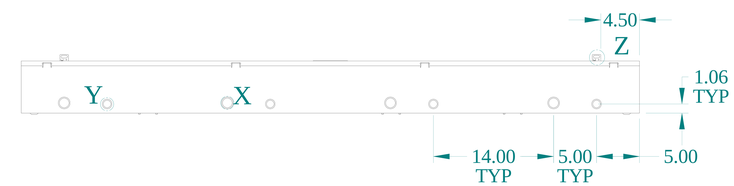

BACK VIEW

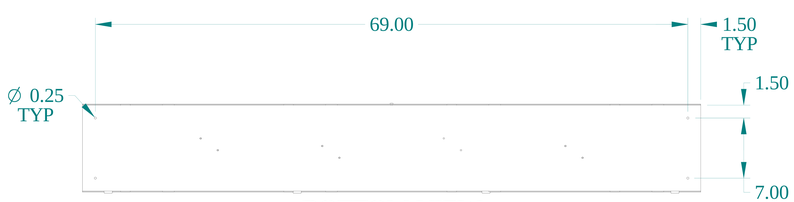

BOTTOM VIEW

DETAIL Y
TYP

DETAIL X
TYP

HAMMOND MANUFACTURING®

www.hammondmfg.com

Data subject to change without notice.

Part # : CST6603	Date : Nov. 4, 2020

Link:www.hammfg.com/CST6603