Rev	AWO #	Description	Date	Appr
-		RELEASED	11/14/19	
A		UPDATE SPEC.	5/18/20	LH/KC

APPROVED: _____

DATE: _____ TITLE: _____

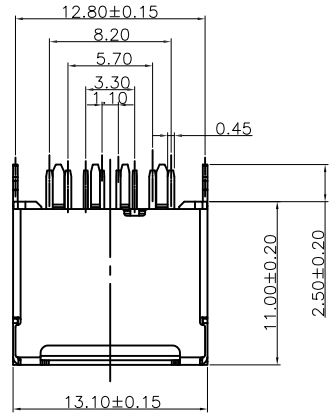

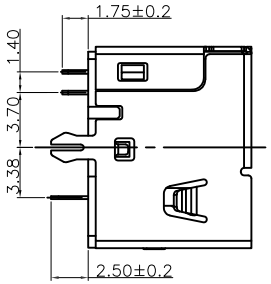

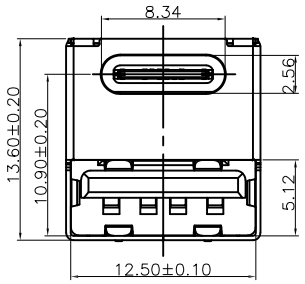

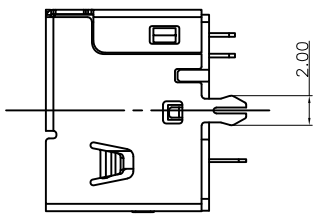

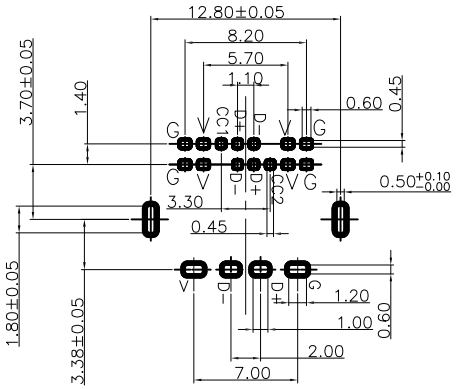

RECOMMENDED PCB LAYOUT

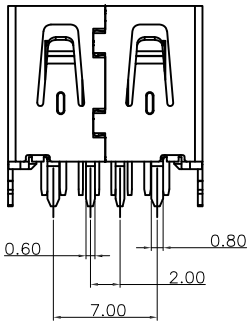

SPECIFICATIONS:

Material:

Insulator: High Temp Thermoplastic, rated UL 94V–0
Insulator color: Black
Contacts: Copper Alloy
Center Piece: Stainless Steel
Shell: Steel, Nickel plated
Clip: Nickel Plated

Plating:

Gold flash over Nickel underplate on contact area,
Tin over Nickel underplate on solder tails

Electrical:

Rated current: Type–C: 8.0 A max
USB2.0: 5.0 A max
Contact resistance: 40 mohms max.
Insulation resistance: 100 Mohms
Dielectric withstanding voltage: 100 VAC

Mechanical:

Mating Force: Type–C: 5N~20N
USB 2.0: 35N max
Durability: Type–C: 10,000 Cycles
USB 2.0: 3,000 Cycles

Temperature Rating:

Operating temperature: –30°C to +85°C

Environmental:

Lead free, RoHS compliant.

RoHS COMPLIANT

UNLESS OTHERWISE SPECIFIED
ALL DIMENSIONS ARE INCHES [MM]
TOLERANCES: EXCEPT AS NOTED

	MM	ANGLE
X.	± 0.50	± 1°
.X	± 0.25	
.XX	± 0.15	
.XXX	± 0.10	

APPROVALS		DATE
DRAWN	LH	11/14/19
CHECKED	TW	11/14/19
APPROVED		

ADAM TECH INTERCONNECTS
909 Rahway Avenue,
Union, NJ 07083
Phone: 908-687-5000
Fax: 908-687-5710

TITLE
UNIVERSAL SERIAL BUS, DUAL PORT, VERTICAL,
C31 TYPE OVER A 2.0, PCB, TERMINALS

SIZE	PART NO.	REV.
X	USB-C31/A-D-VT-CS1	A

REF: S00288T | SCALE: NTS | SHEET 1 OF 1