TAS5414A and TAS5424A Evaluation Module

User's Guide

Literature Number: SLOU210
September 2007

Texas Instruments

TAS5414A and TAS5424A Evaluation Module

The TAS5414A/TAS5424A evaluation module (EVM) is intended to be used to demonstrate the device's capabilities. All the device's features can be accessed through the hardware and the software graphical user interface (GUI) supplied. This user's guide contains a description of the EVM and the GUI. Included are the EVM schematic, bill of materials, and the board layout.

1.1 Quick-Start Guide

This section provides a guide to set up and power up the EVM without the details in its operation. For a more detailed operation, read the complete guide.

1.1.1 Overview

The EVM consists of single printed-circuit board (PCB) mounted inside a metal chassis for EMC testing. The EVM must have an I^2C controller board to function. The USB-to-I^2C controller PCB connects to a personal computer (PC) through an USB cable. The EVM connects to the I^2C controller PCB through the supplied 6 pin DIN cable included in the EVM package. The PC needs the graphical user interface (GUI) software to control the EVM. The GUI, this document, and any necessary documents are all on the included CD.

1.1.2 Software Installation

The software is located on the CD that is included with the EVM package. Run the setup.exe program located in the TAS54x4A GUI directory to install the GUI. For more details, read chapter 3.

1.1.3 Connections

The connections are for an analog signal at the input, speaker loads, power, and I^2C. The audio inputs are made through the four RCA connectors. The I^2C control signals are made through the 6-pin DIN connector. The power connectors and speaker connectors are made using the 10-pin connector.

The basic connections are: PVDD or power is connected to the EVM through the supplied 10-pin connector with the twisted red and black wires. The speakers or loads are connected through the same 10-pin connector with the twisted red and white wires. The 6-pin DIN is connected to the I^2C-to-USB adapter board. See the Figure 1-1 for details.

Adobe, Acrobat, Reader are trademarks of Adove Systems Incorporated.
Windows is a trademark of Microsoft Corporation.

1.1.4 Initial Power Up

Before applying power, check to make sure the Standby Control switch is in the *Standby ON* position, as shown in Figure 1-1.

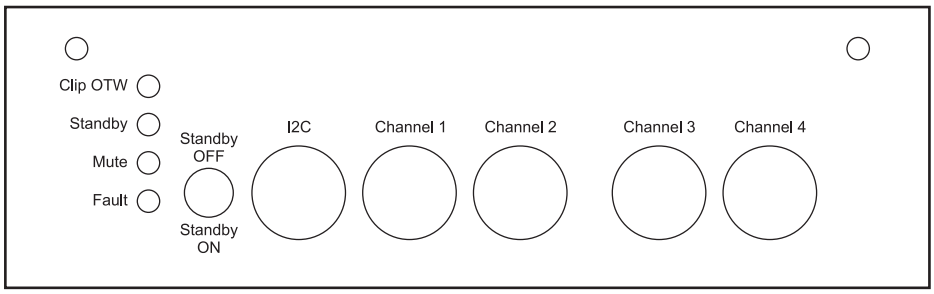

Figure 1-1. End Panel for Input Connections

Apply power; the STANDBY and MUTE LEDs should be on. The Fault LED may also be on, but not necessarily. This indicates that the unit is powered, and the TAS5414A or TAS5424A is in Standby Mode and Mute Mode. The fault indicated is an undervoltage fault during power up. This is normal and is cleared by reading the I^2C Register 0x00, but to quickly clear the fault, use the Standby switch. Switch it to the OFF position and then back to ON. This resets the device into its default state and clears the power-up fault.

1.1.5 Basic Graphical User Interface Controls

This is the main window for the graphical user interface (GUI). The default state for the TAS5414A and TAS5424A is *mute*. To *unmute*, click the Play All button at the top left of the window. To *mute*, click the Mute All button.

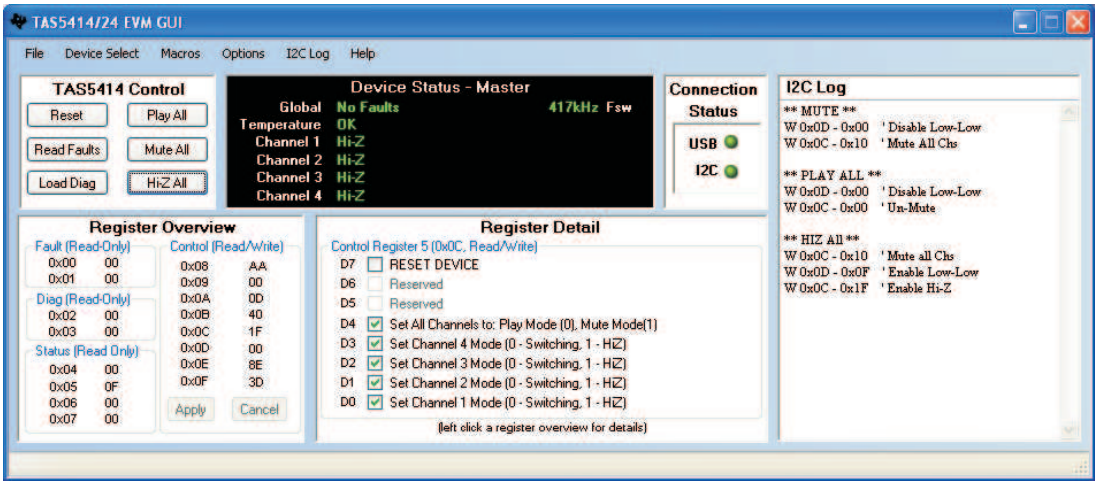

Figure 1-2. Main Window

1.2 EVM Description

1.2.1 Description of Input

1.2.1.1 Analog Inputs

Analog inputs are provided for either balanced or unbalanced depending on which device is in the EVM. Both are connected to the EVM through the four RCA jacks. The unbalanced inputs have the shield of the RCA connected to ground. The balanced inputs have the plus (+) input on the center pin of the RCA and the minus (–) input on the shield. The balanced ground can be connected to the chassis or Power- (GND).

The I^2C connections are made through a 6-pin DIN connector. The provided cable and adapter PCB connect the EVM to the host PCB. The adapter PCB is an I^2C-to-USB converter, which is a HID device and is automatically recognized by the PC when connected. Therefore, no drivers are needed.

1.2.1.2 Power

The EVM requires one dc power connection. The connection is made through a 10-pin supplied connector. The black wire is ground and the red wire is connected to PVDD which can be 8 to 21.5 Vdc. The connector is Samtec part number IPBD-10-S.

1.2.2 Description of Outputs

1.2.2.1 Speaker Connections

The four speaker connections are located at the one side of the box. The supplied 10-pin connector with twisted red and white wires should be terminated to a speaker load or resistive load. The red wire corresponds to the plus (+) output and the white wire corresponds to the minus (–) output.

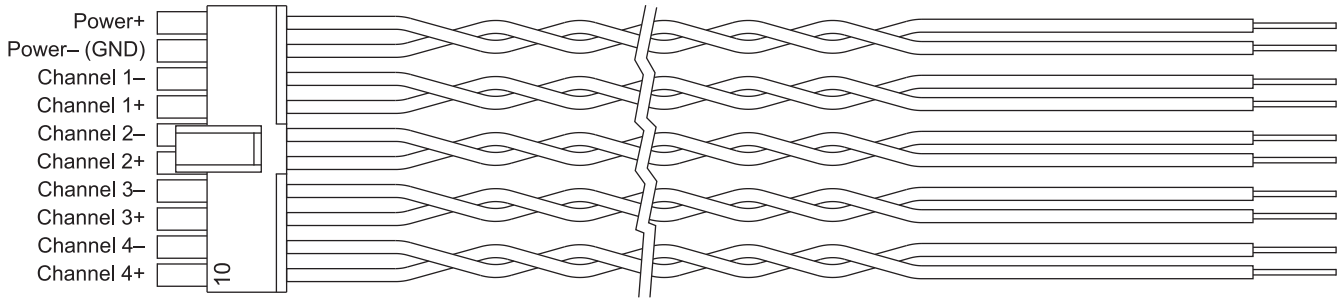

Figure 1-3. Wiring Harness for Power and Speaker Connections

Do not connect any of these outputs to ground. The TAS5414A and TAS5424A have full bridged outputs; connecting to ground triggers a fault.

The outputs can be paralleled by connecting the plus (+) of one channel to the plus (+) of the other channel. The minus (–) connection of one channel and the minus (–) of the other channel must be connected also. When paralleling channels, the input signals must be the same and the gain must be set the same. The gain is set through I^2C.

1.2.3 Controls

1.2.3.1 Standby

The Standby switch is located next to the 6-pin DIN I^2C input connector. The *Standby ON* position can be determined by the toggle being downwards. In this position, it forces the TAS5414A and TAS5424A into the standby mode. This is the same as a *Power On Reset* or POR. This shuts down the device and the I^2C is defeated.

When the switch is moved to the *Standby OFF* position, the TAS5414A and TAS5424A are put into their default power-up mode. The I^2C registers are set to their defaults. The amplifier output is in Hi-Z mode.

1.2.4 Indicator Description

Four LED indicators are located on the chassis next to the Standby switch. One power indicator is located on the PCB; it is for the 3.3-Vdc supply. The 3.3-V supply is needed for the LEDs and the *Standby* circuit. The other four LEDs indicate the four non-I^2C output pins, $\overline{\text{FAULT}}$, MUTE, $\overline{\text{CLIP\_OTW}}$, and $\overline{\text{STANDBY}}$. $\overline{\text{Fault}}$ and $\overline{\text{CLIP\_OTW}}$ signals are also routed to the 6-pin DIN for the GUI. In normal play mode, these four LEDs should not be illuminated.

1.2.5 Clock Dither Circuit

The EVM includes a clock dithering circuit for EMI mitigation. The dither circuit can be disconnected from the TAS5414A or TAS5424A device by removing the jumper JP1 on the PCB. The clock frequency changes ±5% in 50 ms. This was chosen to avoid interference with the audio signal. This circuit can aid in resolving potential AM interference issues.

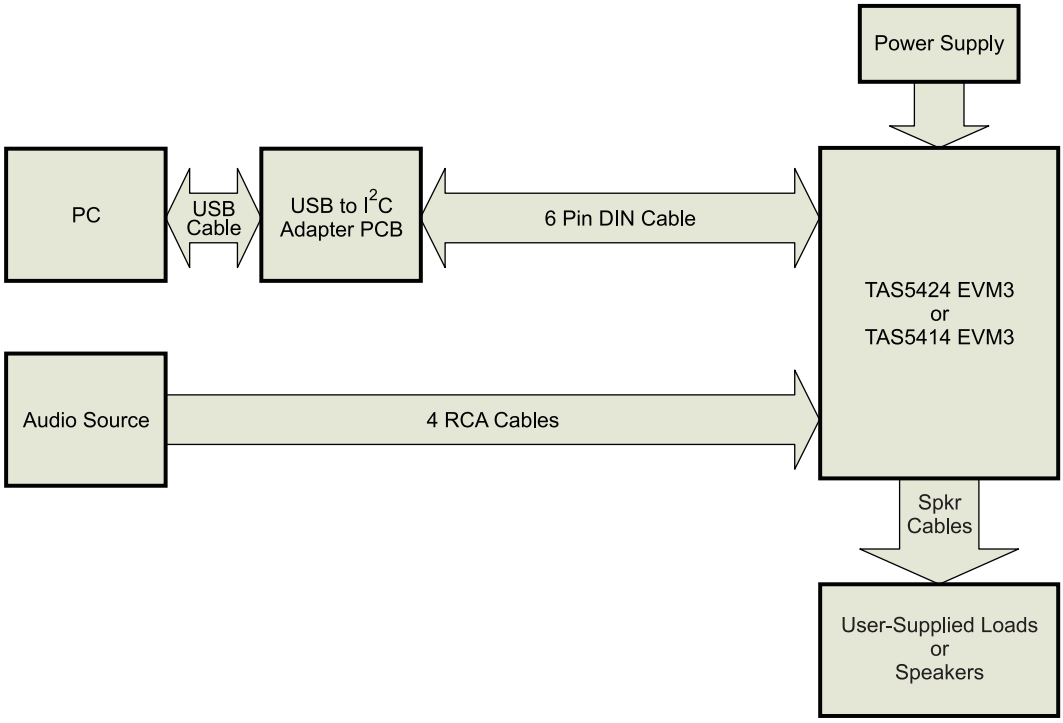

Figure 1-4. EVM System Connection Diagram

1.3 Graphical User Interface

1.3.1 Introduction

The TAS5414A/TAS5424A GUI software is designed to demonstrate the features of the TAS5414A and TAS5424A. It is also able to assist the applications programmer in generating and saving the desired operating characteristics.

The TAS5414A GUI has a feature where it can log the I^2C data being sent to and received from the device. This can be helpful to the programmer in understanding the I^2C commands needed for proper function.

1.3.2 Software Installation

The GUI software is located on the CD-ROM provided with the EVM. Run the setup.exe program located in the TAS54x4A GUI directory on a personal computer (PC) with the Windows™ OS to install the GUI. The PC should connect to the Internet as it needs to download the Microsoft dotnet 2.0 environment, if it is not already on the PC. If needed a copy of the Microsoft dotnet 2.0 setup file is on the CD-ROM.

1.3.3 Hardware Installation

In the EVM package is a small PCB labeled USB2IIC2 on the PCB. This is the USB-to-I^{2}C converter to communicate to the EVM. Connect the USB cable to the PC and the PCB. Connect the 6-pin cable to the connector labeled I2C on the converter PCB to the 6-pin connector on the EVM. Power for this card is provide through the USB connection. The PC should automatically connect to the USB connected PCB.

1.3.4 Using the GUI

1.3.4.1 The Main Window

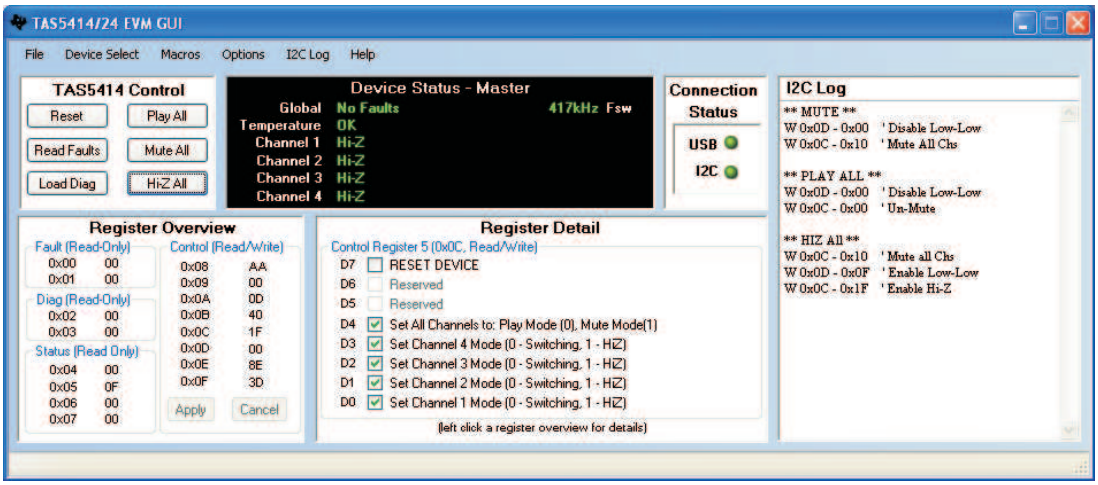

Figure 1-5. Various Panels of Main Window

1.3.4.1.1 TAS5414A Control Panel

The Control Panel consists of six buttons that perform basic functions on all four channels.

Reset: This button sends a software reset to the device via I^{2}C. It is equivalent to sending a 9F to register 0x0C. All the I^{2}C defaults are restored.

Read Faults: This button reads the four fault registers 0x00 through 0x03 and reports the data to the Device Status Panel

Load Diag: This button runs a script to perform the built-in load diagnostics. It places all four channels into Hi-Z mode, runs the load diagnostic, and reports any faults to the Device Status Panel. The details are displayed for each channel.

Play All: This button uses I^{2}C to run a script to place all four channels into play mode. An optional enhanced play version is in the Options Menu. (See Options Menu.)

Mute All: This button uses I^{2}C to mute all four channels. All channels switch at 50% duty cycle, and no signal passes from the input to the output.

Hi-Z All: This button places all four channel outputs into a high-impedance state. The device is first placed in mute. The Low-Low state is then invoked. The Low-Low state connects current sources to/from the output to ground to provide a current path for any stored energy in the speaker. Then, the outputs are placed in Hi-Z.

1.3.4.1.2 Device Status Panel

Device Panel Title: The title at the top of the Device Status Panel shows with which device the GUI is set to communicate. The four options are: Master (shown in Figure 1-5), Slave1, Slave 2, and Slave 3. This is changed in the menu item *Device Select*

Global: This provides fault feedback from the device. If a fault occurs, a red *Fault* is indicated. Read the fault detail in the register 0x00 and 0x01.

Temperature: This has not been implemented as yet

Channel 1-4: These four items provide individual channel output states. Hi-Z, Mute, Low-Low, and Play. The gain setting is displayed with the play indication.

Fsw: This item provides the switching frequency of the outputs.

1.3.4.1.3 Connection Status Panel

Two LED indicators provide connection status.

USB: This indicator is *Gray* when there is no USB connection to the USB2II2C PCB. The I2C LED is *off*. The indicator is *Green* when a connection is good.

I2C: This indicator is *Red* when there is a USB connection, but no I2C connection. A *Green* indicator shows that I^2C communication is functioning properly. If the LED is *off*, then there is no USB connection.

1.3.4.1.4 I2C Log Panel

All the I^2C commands that are sent or received by the TAS5414A and TAS5424A are shown in this panel. The displayed data can be copied to the clipboard for a programming aid. This type of information can be controlled by the I2C Log menu item. An *R* indicates a value read from the device and an *W* indicates a value sent to the device. Valuable comments also are provided. (See I2C Log Menu.)

1.3.4.1.5 Register Overview Panel

This panel provides the hexadecimal (hex) data for each I2C register. The hex data control registers can be directly changed here and sent to the device with the Apply button. Any changes made to the data will be cleared by clicking the Cancel button. The Register Detail Panel is changed by clicking on the Register or on it hex value.

1.3.4.1.6 Register Detail Panel

This panel provides a detailed view of each register. By clicking on a register in the Register Overview Panel, the details of that register are shown. Each bit has its description and its value shown by the checkbox. A checkbox with a check mark indicates a logical *1* and an unchecked checkbox indicates a logical *0*. Changes to each bit can be made by clicking on the checkbox. The changes are sent to the device by clicking on the Apply button in the Register Overview Panel.

1.3.4.1.7 Menu Bar

File: In this menu option, the Exit function can be found at the bottom of the drop-down menu.

Device Select: The I2C device select value can be changed in the Menu. For the EVM use the default value which is *Master*.

Macros: In this menu option, macros can be used.

Custom Macros: This is not yet implemented

Preloaded macros: This menu option provides a list of built-in macros to perform typical I^2C routines.

Options: The option to have the enhanced turn-on script or not is selected in this menu. The enhanced turn-on options wait for the device to fully transition from Hi-Z to Mute by reading register 0x06 until mute is enabled. This ensure that the device is in Mute before transitioning to play. This provides an absolute method of *pop and click free* turn-on.

I2C Log: The I2C Log Panel controls are located in this menu

Log Enabled: When selected, this menu option shows the I2C Log Panel. When disabled, the I2C Log Panel is hidden.

Show I2C Reads: When selected, this menu option shows the value read from the device. These are indicated with an *R*.

Show I2C Writes: When selected, this menu option shows the values that are sent to the device. These are indicated with a *W*.

Show Comments: When selected, this menu option shows the comments. The comments are not shown when this item is not selected.

Clear: This menu option clears the log data. The data is lost.

Help: This menu option provides three items:

About: This provide the revisions level of the software.

User Guide: This opens the User's Guide in the Adobe™ Acrobat™ Reader™. Acrobat Reader needs to be available on the PC.

TAS5414A/TAS5424A Webpage: This opens the TAS5414A/TAS5424A Web page at the Texas Instruments Web site in the default browser. The most current data sheets, application reports, and GUI software are available for downloading.

1.4 Board Layouts

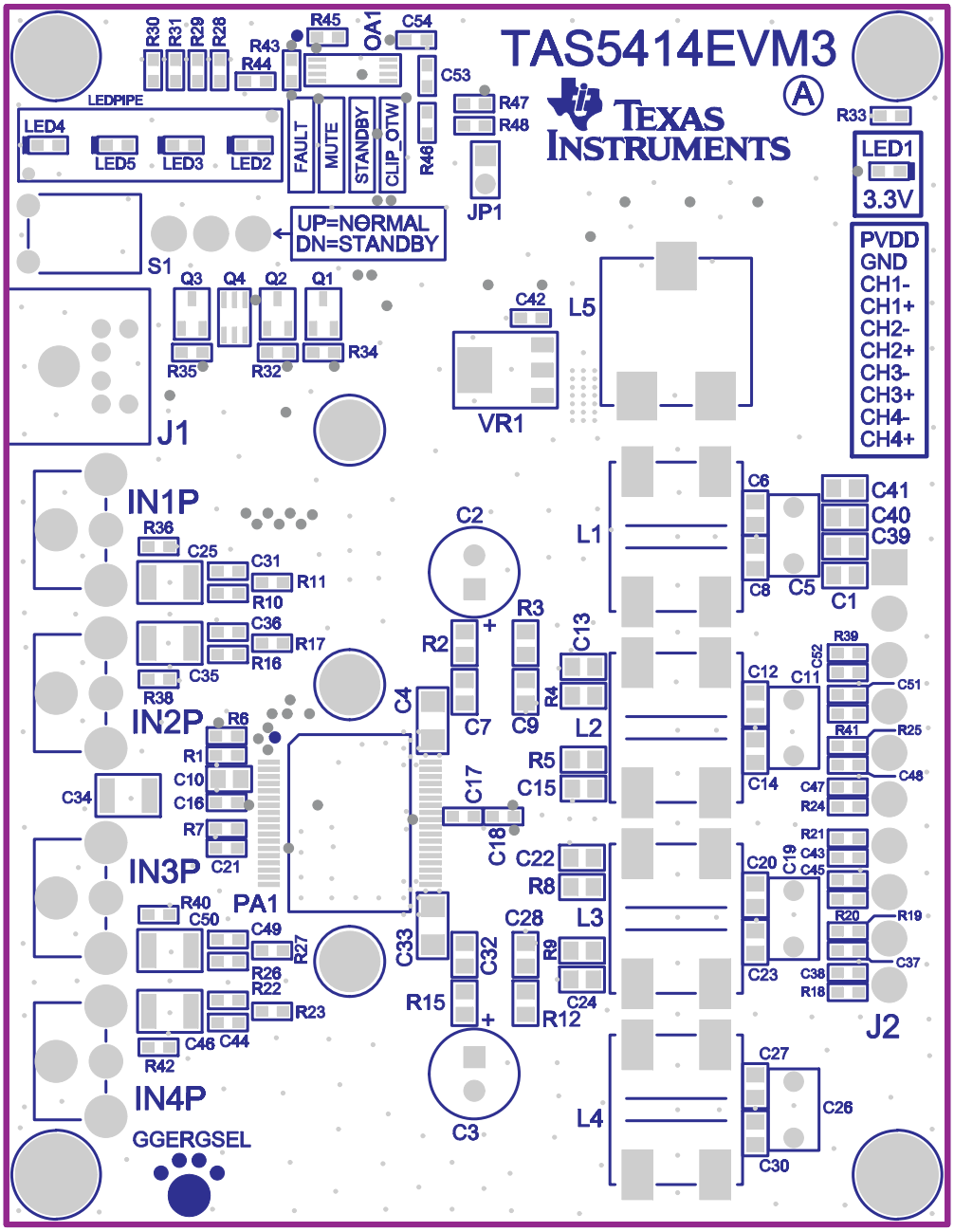

Figure 1-6. TAS5414AEVM3 Top Assembly Layer

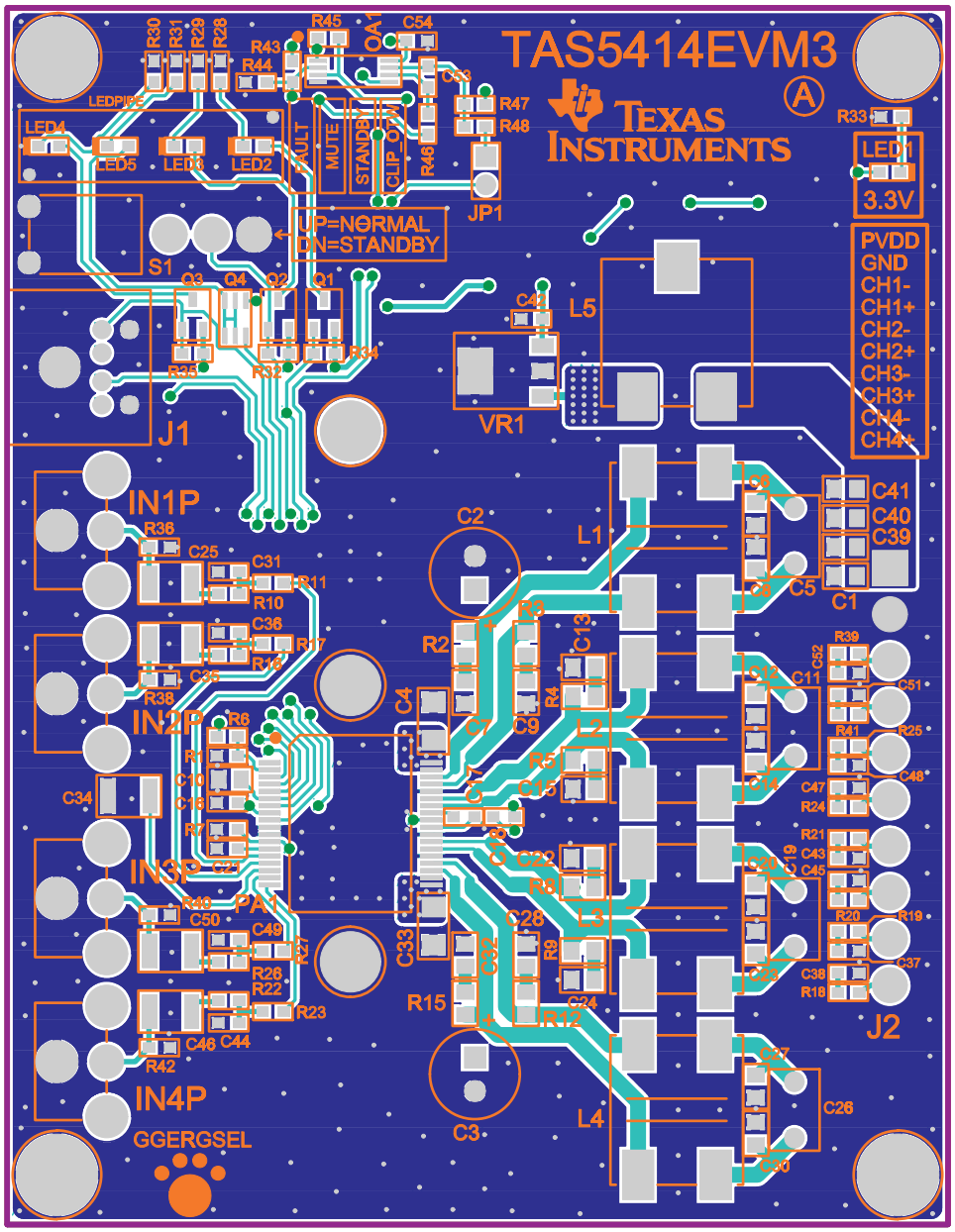

Figure 1-7. TAS5414AEVM3 Top Composite Layer

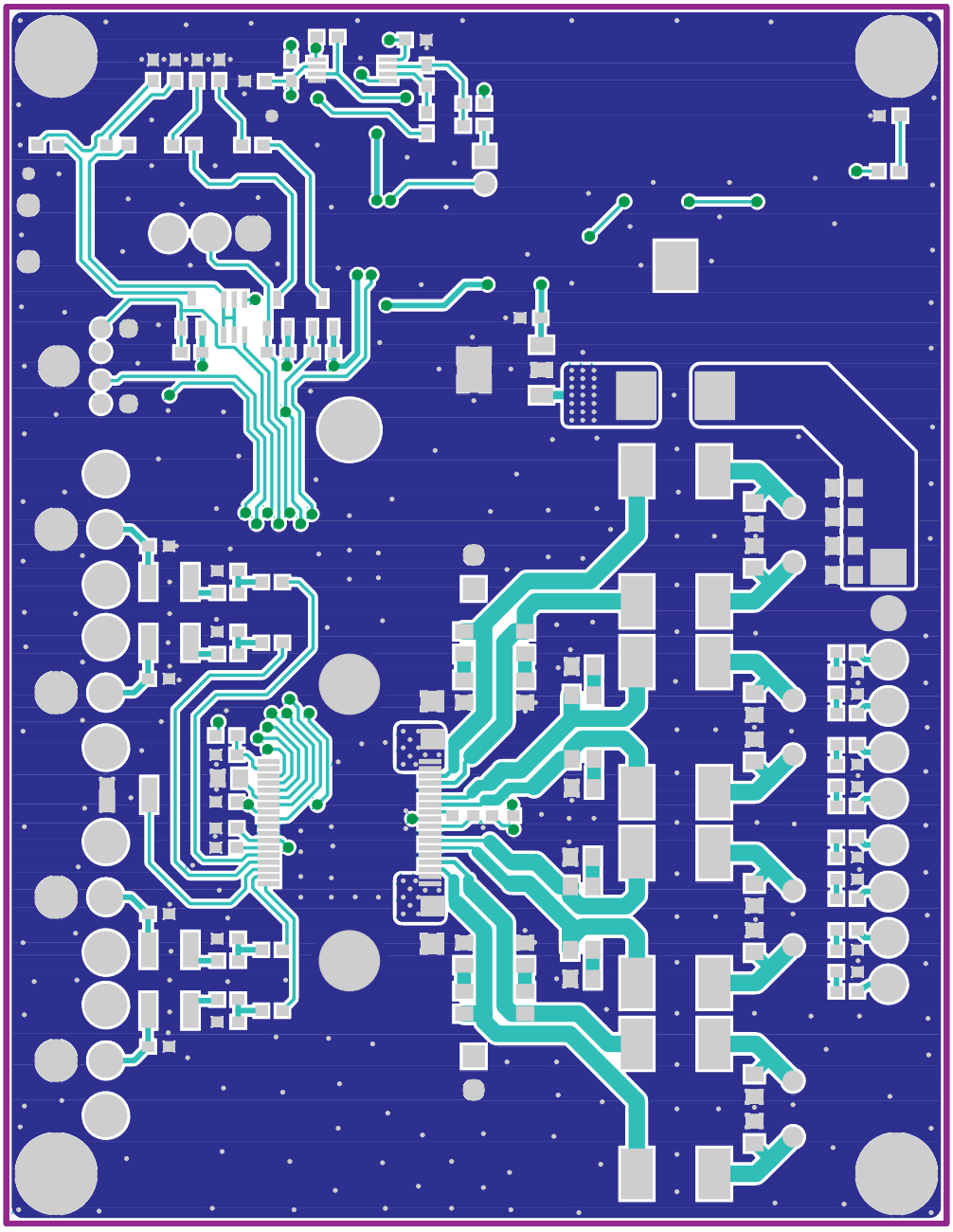

Figure 1-8. TAS5414AEVM3 Top Copper Layer

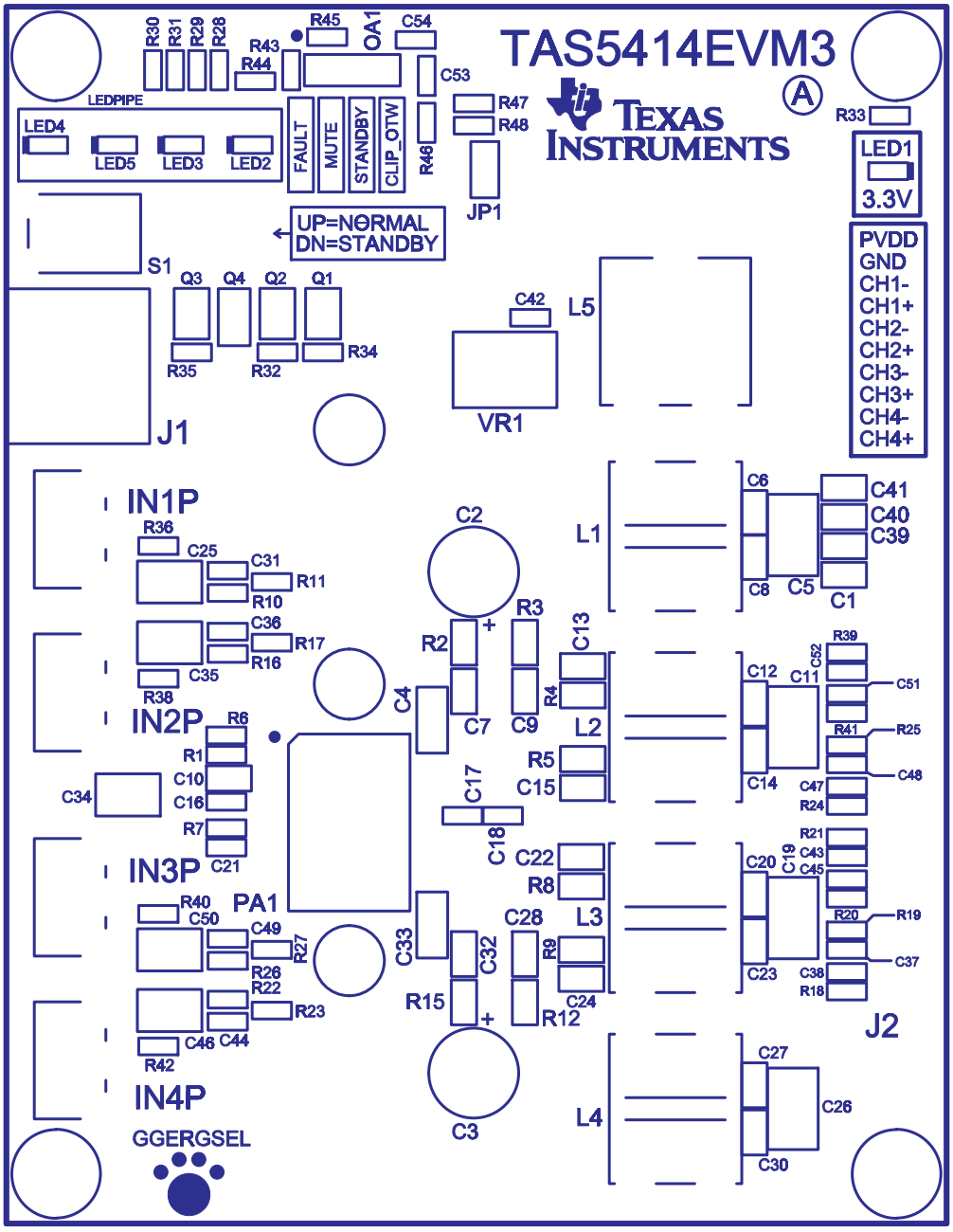

Figure 1-9. TAS5414AEVM3 Top Silkscreen Layer

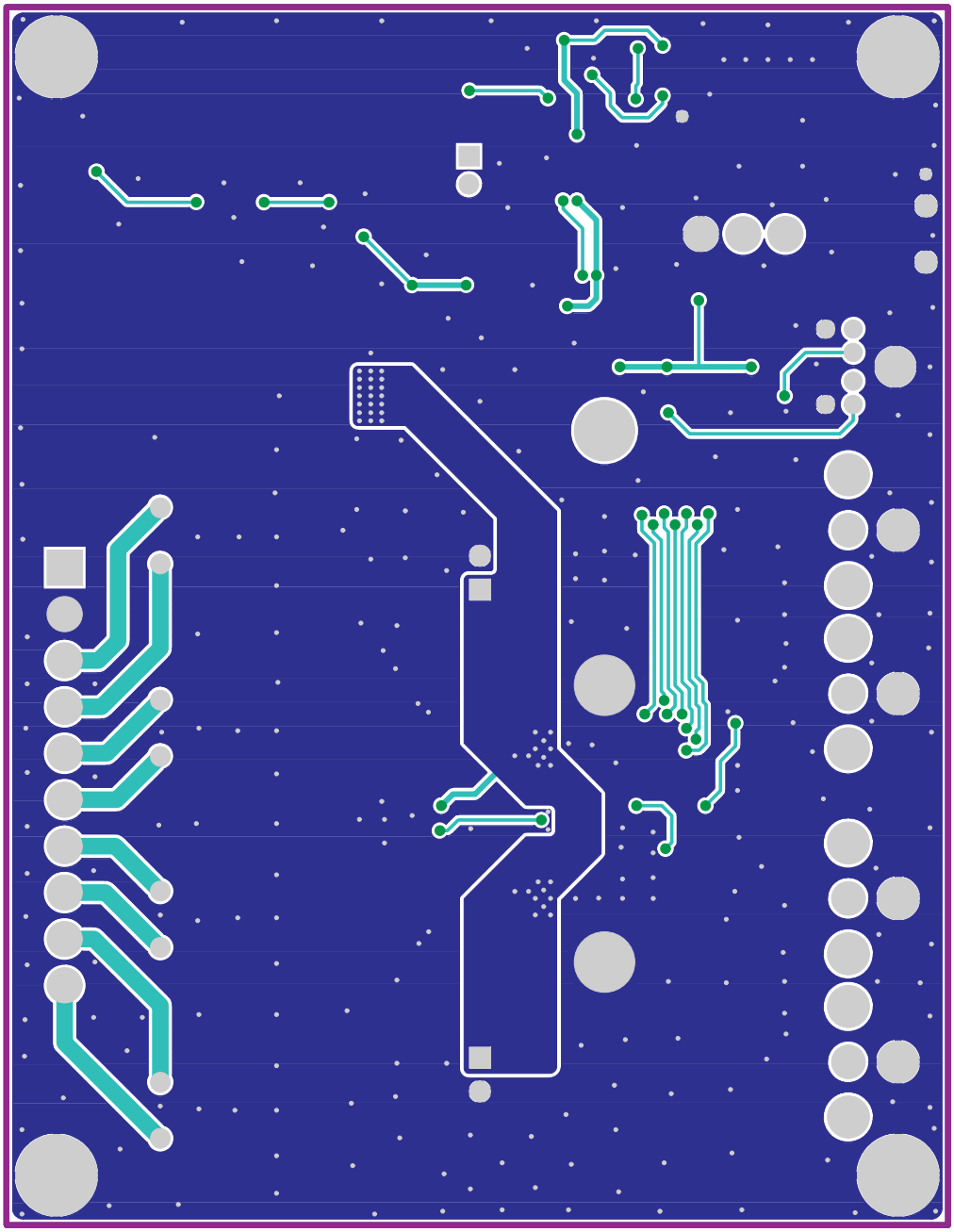

Figure 1-10. TAS5414AEVM3 Bottom Copper Layer

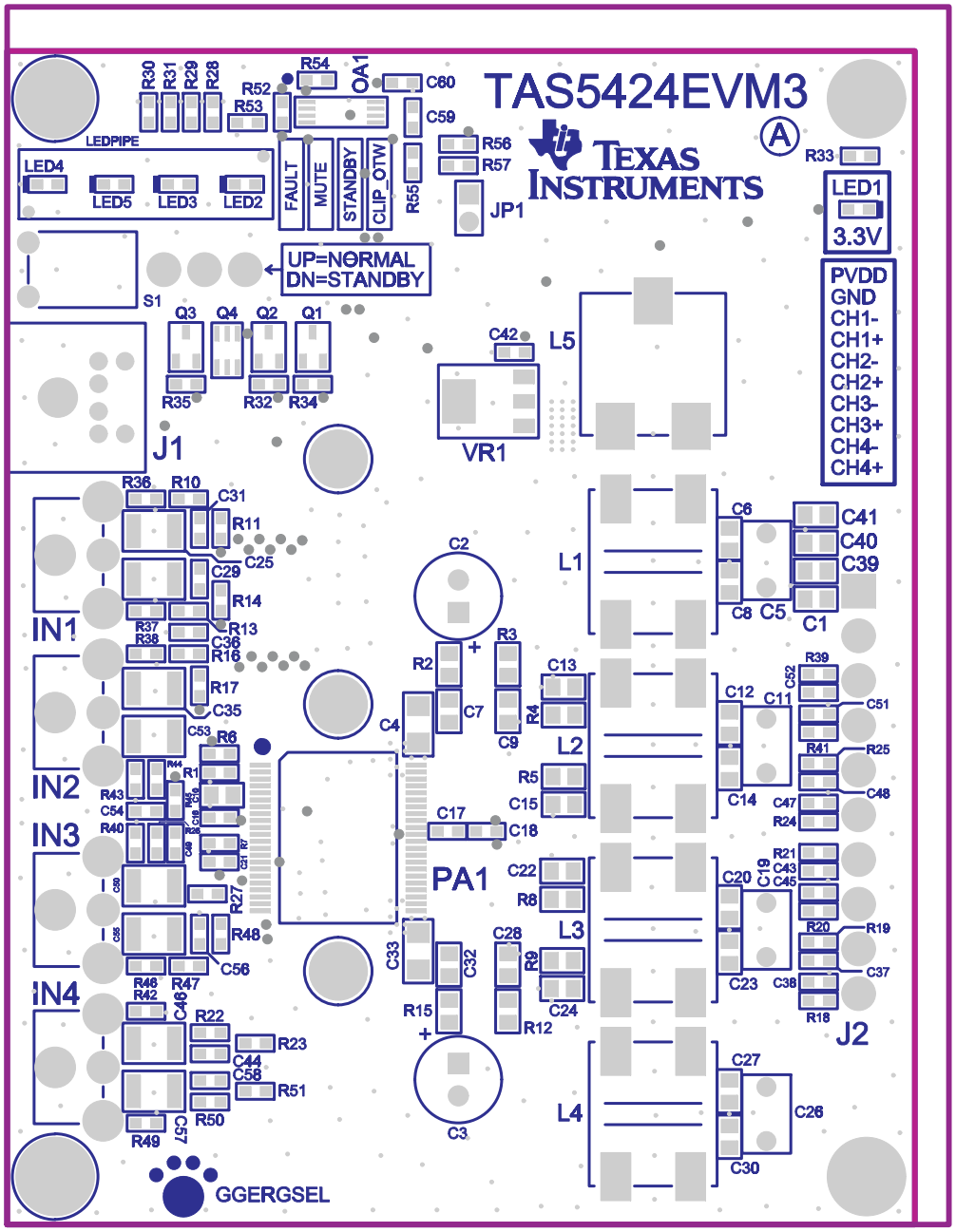

Figure 1-11. TAS5424AEVM3 Top Assembly Layer

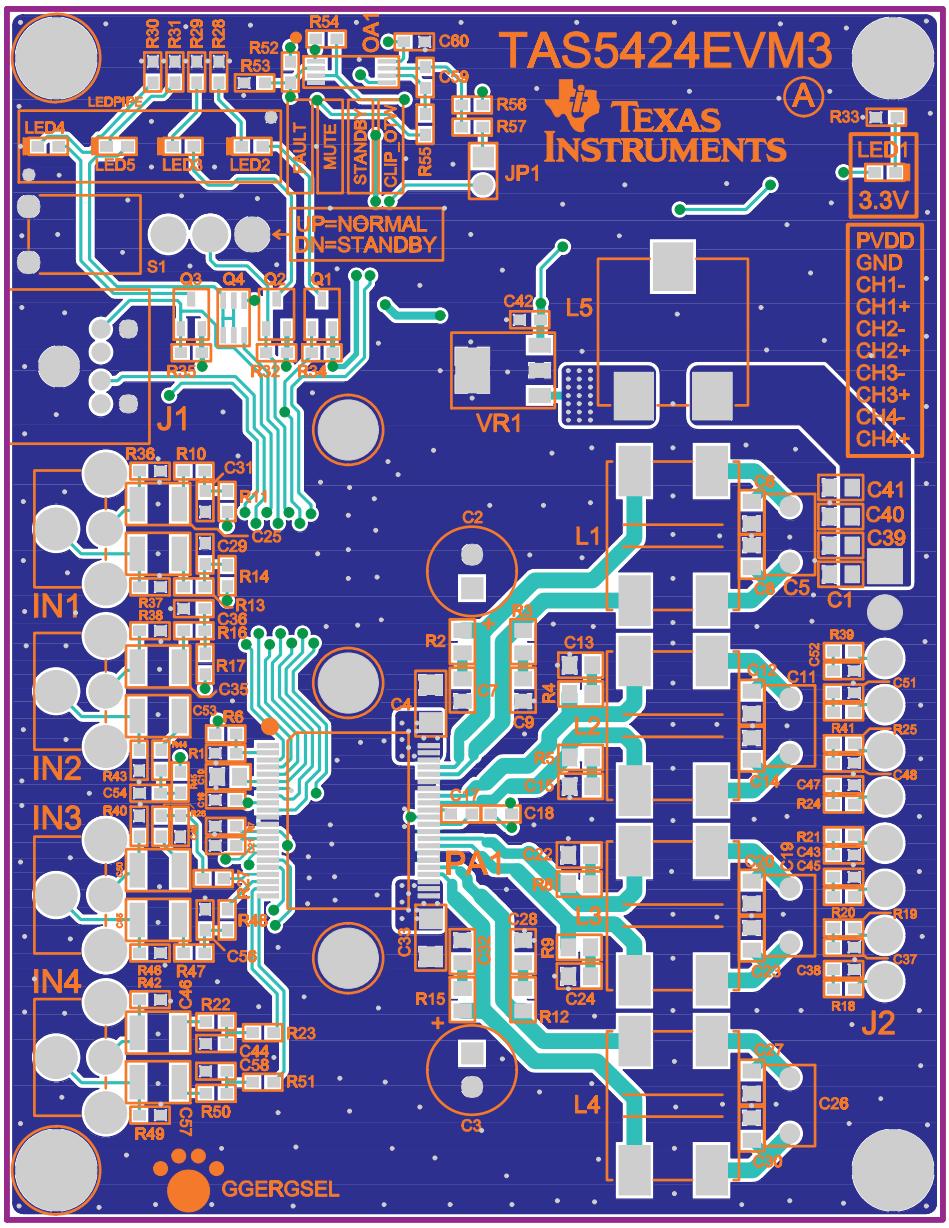

Figure 1-12. TAS5424AEVM3 Top Composite Layer

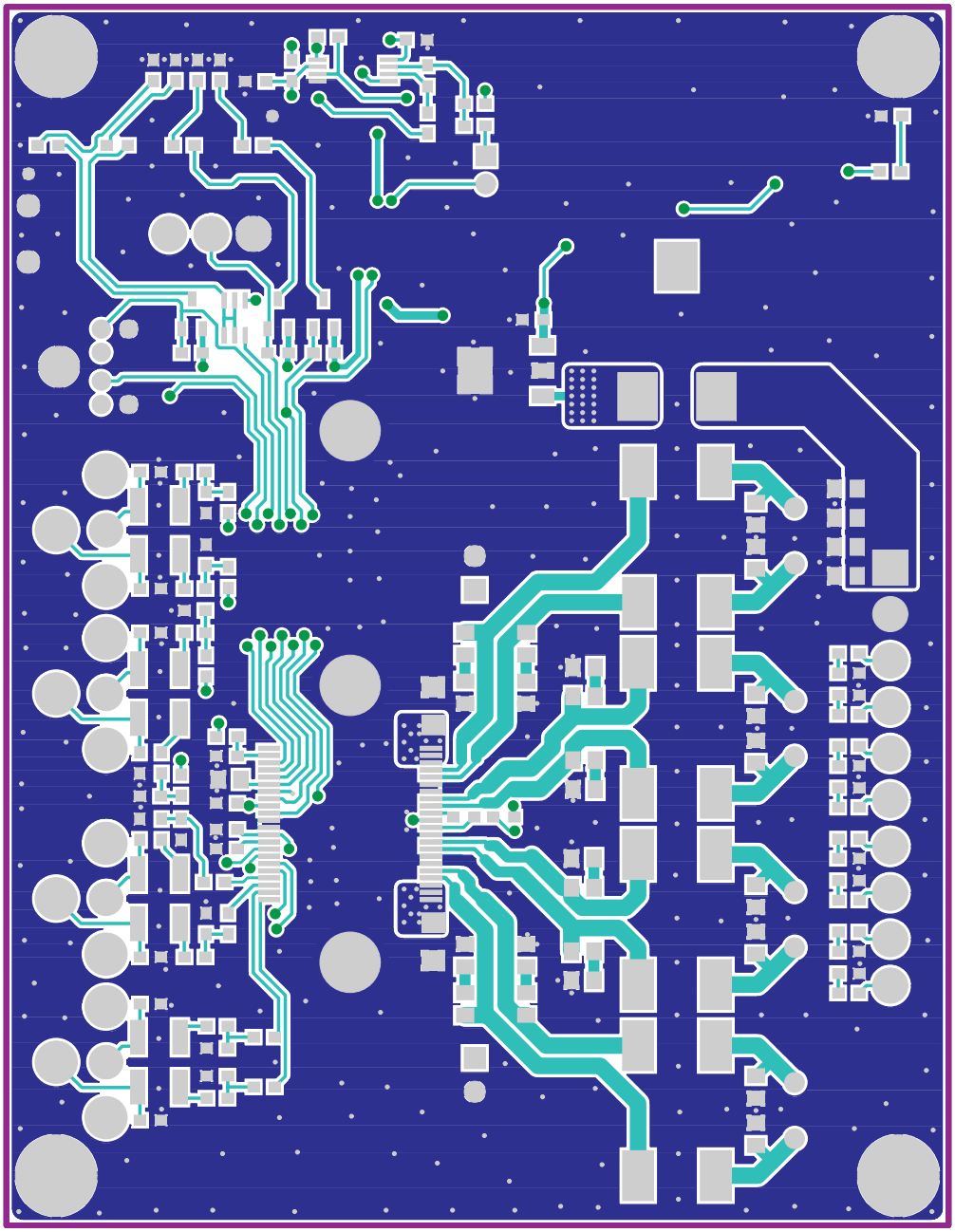

Figure 1-13. TAS5424AEVM3 Top Copper Layer

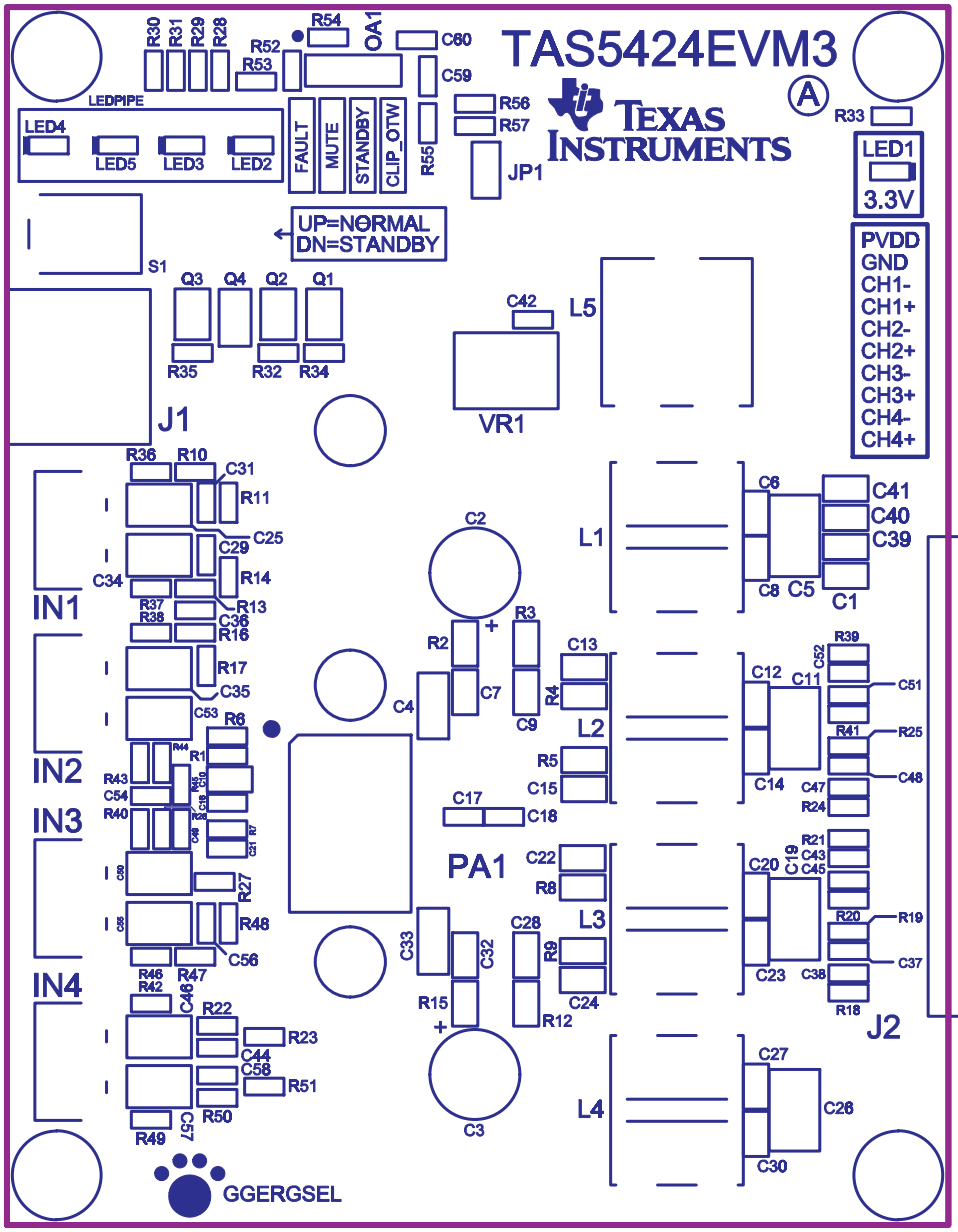

Figure 1-14. TAS5424AEVM3 Top Silkscreen Layer

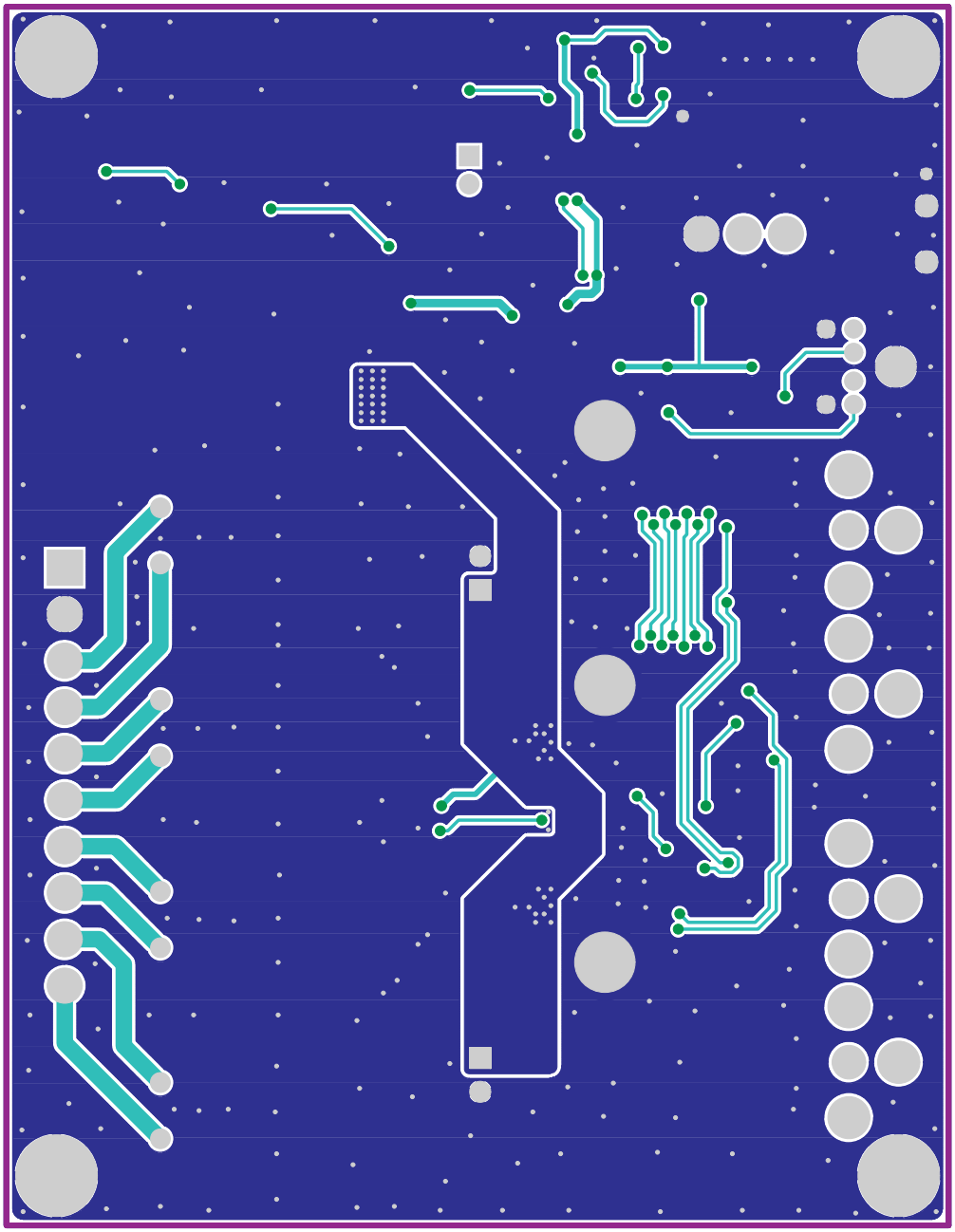

Figure 1-15. TAS5424AEVM3 Bottom Copper Layer

1.5 Bill of Materials and Schematics

1.5.1 TAS5414AEVM3 and TAS5424AEVM3 Bill of Materials

Table 1-1 presents the bill of materials for the TAS5414AEVM3, and Table 1-2 presents the bill of materials for the TAS5424AEVM3.

Table 1-1. Bill of Materials for TAS5414AEVM3

Item	Description	Ref Des	Qty	Manufacturer	Mfr Part No.
		TI SEMICONDUCTORS			
1	POWER AMP, PSOP3_36-DKD	PA1	1	Texas Instruments	TAS5414ADKD
2	DUAL OP AMP, TSSOP14-PW	OA1	1	Texas Instruments	TLV2462AQPWR
		SEMICONDUCTORS			
3	VOLTAGE REGULATOR, 3.3V 500mA SOT223-DCY	VR1	1	Texas Instruments	UA78M33CDCYR
4	Transistor PNP 50V PreBiased/4.7K 100mA SOT23-DBV3	Q1, Q2, Q3	3	Diodes Inc.	DDTA143TCA-7
5	MOSFET, P-Chan 30V 2.3A, SOT23-DBV6	Q4	1	International Rectifier	IRLMS5703TR
6	LED, GREEN SMD0603	LED1	1	Lite-OnTrading	SML-LX0603SUGW-TR
7	LED, ORANGE SMD0603	LED5	1	Sharp Microelectronics	GM1JJ35200AE
8	LED, RED SMD0603	LED2, LED4	2	Lite-OnTrading	LTST-C190CKT
9	LED, YELLOW SMD0603	LED3	1	Lite-OnTrading	LTST-C190KSKT
		CAPACITORS			
10	CAP 1200 pF 50V CERM 0603 COG	C31, C36, C44, C49	4	Murata	GRM1885C1H122JA01D
11	CAP 0.01 µF 25V CERM 0603 X7R	C37, C38, C43, C45, C47, C48, C51, C52	8	Panasonic	ECJ-1VB1E103K
12	CAP 0.1 µF 16V CERM 0603 X7R	C16, C21, C42, C54	4	Panasonic	ECJ-1VB1C104K
13	CAP 1.0 µF 25V CERM 0603 X5R	C17, C18, C53	3	Panasonic	ECJ-1VB1E105K
14	CAP 1000 pF 50V CERM 0805 X7R	C7, C9, C13, C15, C22, C24, C28, C32	8	Panasonic	ECJ-2VB1H102K
15	CAP 2200 pF 50V CERM 0805 X7R	C41	1	Panasonic	ECJ-2VB1H222K
16	CAP 0.082 µF 50V CERM 0805 X7R	C40	1	Panasonic	ECJ-2YB1H823K
17	CAP 0.15 µF 25V CERM 0805 X7R	C6, C8, C12, C14, C20, C23, C27, C30	8	Panasonic	ECJ-2YB1E154K
18	CAP 0.33 µF16V CERM 0805 X7R	C10	1	Panasonic	ECJ-2YB1C334K
19	CAP 4.7 µF 16V CERM 0805 X5R	C1, C39	2	Panasonic	ECJ-2FB1C475K
20	CAP 0.1 µF 50V CERM 1206 X7R	C4, C33	2	Panasonic	ECJ-3VB1H104K
21	CAP 1.0 µF 16V FILM 20% 1210	C25, C34, C35, C46, C50	5	Panasonic	ECP-U1C105MA5
22	CAP 0.47 µF 100V METAL POLYESTER FILM MKT	C5, C11, C19, C26	4	EPCOS	B32529C1474J
23	CAP 330 µF 25V RAD ALUM ELEC FC C2, C3 2		2	Panasonic	EEU-FC1E331L
		RESISTORS			
24	RES 1.0 Ω 1/10W 5% SMD 0603	R18–R21, R24, R25, R39, R41	8	Panasonic	ERJ-3RQJ1R0V
25	RES 47 Ω 1/16W 5% SMD 0603	R1	1	Yageo	9C06031A47R0JLHFT
26	RES 332 Ω 1/16W 1% SMD 0603	R28–R31, R33	5	Panasonic	ERJ-3EKF3320V
27	RES 499 Ω 1/16W 1% SMD 0603	R10, R11, R16, R17, R22, R23, R26, R27	8	Panasonic	ERJ-3EKF4990V
28	RES 8.25 kΩ 1/16W 1% SMD 0603	R47	1	Panasonic	ERJ-3EKF8251V
29	RES 10 kΩ 1/16W 5% SMD 0603	R32, R34, R35, R45	4	Panasonic	9C06031A1002JLHFT
30	RES 15.0 kΩ 1/16W 1% SMD 0603	R43, R44, R46	3	Panasonic	ERJ-3EKF1502V
31	RES 20.0 kΩ 1/16W 1% SMD 0603	R6, R7	2	Panasonic	ERJ-3EKF2002V
32	RES 49.9 kΩ 1/16W 1% SMD 0603	R36, R38, R40, R42	4	Panasonic	ERJ-3EKF4992V
33	RES 470 kΩ 1/16W 5% SMD 0603	R48	1	Uageo	RC0603JR-07470KL
34	RES 5.6 Ω 1/4W 1% SMD 0805	R2–R5, R8, R9, R12, R15	8	Susumu Co	RL1220S-5R6-F
		INDUCTORS			
35	INDUCTOR, 10 µH 8.7A 15 mΩ	L5	1	Coil Craft	SER1360-103KLB

Table 1-1. Bill of Materials for TAS5414AEVM3 (continued)

Item	Description	Ref Des	Qty	Manufacturer	Mfr Part No.
36	COIL FOR CAR AUDIO, EIE CORE	L1–L4	4	TOKO AMERICA	HEAW
	JACKS AND HEADERS				
37	Jack, PS2-Female, 6 Position, PCB-Right Angle	J1	1	CUI STACK	MD-60S
38	JACK, RCA, PCB-RA, ECONO ALL-METAL	IN1P, IN2P, IN3P, IN4P	4	CUI STACK	RCJ-017
39	Header, 2 Pin Male, Straight, Gold	JP1	1	Sullins	PZC02SAAN
40	POWERMATE HEADER, 1x10 male PCB-RA ROHS	J2	1	Santec	IPBT-110-H1-T-S-RA
	SWITCHES AND LIGHTPIPES				
41	SWITCH PCB-RA SPDT SERIES 100	S1	1	E-SWITCH	100SP1T2B4M7RE
42	LEDx4 LIGHT PIPE	LEDPIPE	1	LUMEX	LPF-C014301S
	SHUNTS				
43	SHUNT, BLACK AU FLASH 0.100	JP1	1	Sullins	SPC02SYAN
	Component Count: 125				
	MISSING FROM SEQUENCE				
	R13, R14, R37, C29				

Table 1-2. Bill of Materials for TAS5424AEVM3

Item	Description	Ref Des	Qty	Manufacturer	Mfr Part No.
	TI SEMICONDUCTORS				
1	POWER AMP, PSOP3_44-DKD	PA1	1	Texas Instruments	TAS5424ADKD
2	DUAL OP AMP, TSSOP14-PW	OA1	1	Texas Instruments	TLV2462AQPWR
	SEMICONDUCTORS				
3	VOLTAGE REGULATOR, 3.3V 500mA SOT223-DCY	VR1	1	Texas Instruments	UA78M33CDCYR
4	Transistor PNP 50V PreBiased/4.7K 100mA SOT23-DBV3	Q1, Q2, Q3	3	Diodes Inc.	DDTA143TCA-7
5	MOSFET, P-Chan 30V 2.3A, SOT23-DBV6	Q4	1	International Rectifier	IRLMS5703TR
6	LED, GREEN SMD0603	LED1	1	Lite-OnTrading	SML-LX0603SUGW-TR
7	LED, ORANGE SMD0603	LED5	1	Sharp Microelectronics	GM1JJ35200AE
8	LED, RED SMD0603	LED2, LED4	2	Lite-OnTrading	LTST-C190CKT
9	LED, YELLOW SMD0603	LED3	1	Lite-OnTrading	LTST-C190KSKT
	CAPACITORS				
10	CAP 1200 pF 50V CERM 0603 COG	C29, C31, C36, C44, C49, C54, C56, C58	8	Murata	GRM1885C1H122JA01D
11	CAP 0.01 µF 25V CERM 0603 X7R	C37, C38, C43, C45, C47, C48, C51, C52	8	Panasonic	ECJ-1VB1E103K
12	CAP 0.1 µF 16V CERM 0603 X7R	C16, C21, C42, C60	4	Panasonic	ECJ-1VB1C104K
13	CAP 1.0 µF 25V CERM 0603 X5R	C17, C18, C59	3	Panasonic	ECJ-1VB1E105K
14	CAP 1000 pF 50V CERM 0805 X7R	C7, C9, C13, C15, C22, C24, C28, C32	8	Panasonic	ECJ-2VB1H102K
15	CAP 2200 pF 50V CERM 0805 X7R	C41	1	Panasonic	ECJ-2VB1H222K
16	CAP 0.082 µF 50V CERM 0805 X7R	C40	1	Panasonic	ECJ-2YB1H823K
17	CAP 0.15 µF 25V CERM 0805 X7R	C6, C8, C12, C14, C20, C23, C27, C30	8	Panasonic	ECJ-2YB1E154K
18	CAP 0.33 µF16V CERM 0805 X7R	C10	1	Panasonic	ECJ-2YB1C334K
19	CAP 4.7 µF 16V CERM 0805 X5R	C1, C39	2	Panasonic	ECJ-2FB1C475K
20	CAP 0.1 µF 50V CERM 1206 X7R	C4, C33	2	Panasonic	ECJ-3VB1H104K
21	CAP 1.0 µF 16V FILM 20% 1210	C25, C34, C35, C46, C50, C53, C55, C57	8	Panasonic	ECP-U1C105MA5
22	CAP 0.47 µF 100V METAL POLYESTER FILM MKT	C5, C11, C19, C26	4	EPCOS	B32529C1474J
23	CAP 330 µF 25V RAD ALUM ELEC FC C2, C3 2		2	Panasonic	EEU-FC1E331L
	RESISTORS				
24	RES 1.0 Ω 1/10W 5% SMD 0603	R18–R21, R24, R25, R39, R41	8	Panasonic	ERJ-3RQJ1R0V
25	RES 47 Ω 1/16W 5% SMD 0603	R1	1	Yageo	9C06031A47R0JLHFT
26	RES 332 Ω 1/16W 1% SMD 0603	R28–R31, R33	5	Panasonic	ERJ-3EKF3320V

Table 1-2. Bill of Materials for TAS5424AEVM3 (continued)

Item	Description	Ref Des	Qty	Manufacturer	Mfr Part No.
27	RES 499 Ω 1/16W 1% SMD 0603	R10, R11, R13, R14, R16, R17, R22, R23, R26, R27, R44, R45, R47, R48, R50, R51	16	Panasonic	ERJ-3EKF4990V
28	RES 8.25 kΩ 1/16W 1% SMD 0603	R56	1	Panasonic	ERJ-3EKF8251V
29	RES 10 kΩ 1/16W 5% SMD 0603	R32, R34, R35, R54	4	Panasonic	9C06031A1002JLHFT
30	RES 15.0 kΩ 1/16W 1% SMD 0603	R52, R53, R55	3	Panasonic	ERJ-3EKF1502V
31	RES 20.0 kΩ 1/16W 1% SMD 0603	R6, R7	2	Panasonic	ERJ-3EKF2002V
32	RES 49.9 kΩ 1/16W 1% SMD 0603	R36–R38, R40, R42, R43, R46, R49	8	Panasonic	ERJ-3EKF4992V
33	RES 470 kΩ 1/16W 5% SMD 0603	R57	1	Uageo	RC0603JR-07470KL
34	RES 5.6 Ω 1/4W 1% SMD 0805	R2–R5, R8, R9, R12, R15	8	Susumu Co	RL1220S-5R6-F
		INDUCTORS			
35	INDUCTOR, 10 µH 8.7A 15 mΩ	L5	1	Coil Craft	SER1360-103KLB
36	COIL FOR CAR AUDIO, EIE CORE	L1–L4	4	TOKO AMERICA	HEAW
		JACKS AND HEADERS			
37	Jack, PS2-Female, 6 Position, PCB-Right Angle	J1	1	CUI STACK	MD-60S
38	JACK, RCA, PCB-RA, ECONO ALL-METAL	IN1, IN2, IN3, IN4	4	CUI STACK	RCJ-017
39	Header, 2 Pin Male, Straight, Gold	JP1	1	Sullins	PZC02SAAN
40	POWERMATE HEADER, 1x10 male PCB-RA ROHS	J2	1	Santec	IPBT-110-H1-T-S-RA
		SWITCHES AND LIGHTPIPES			
41	SWITCH PCB-RA SPDT SERIERS 100	S1	1	E-SWITCH	100SP1T2B4M7RE
42	LEDx4 LIGHT PIPE	LEDPIPE	1	LUMEX	LPF-C014301S
		SHUNTS			
43	SHUNT, BLACK AU FLASH 0.100	JP1	1	Sullins	SPC02SYAN
	Component Count: 144				

1.5.2 TAS5414AEVM3 and TAS5424AEVM3 Schematics

Appended following this page are the schematic for the TAS5414AEVM3 and the schematic for the TAS5424AEVM3, respectively.

1.6 Related Documentation from Texas Instruments

TAS5414A, TAS5424A, Four-Channel Automotive Digital Amplifiers data sheet (SLOS535)

TAS5414A EVALUATION BOARD

CONTROLLER I/O

J1
SCL
SDA
GPIO1
GPIO2
Gnd
Gnd
Shield
MINIDIN6
GND

CLIP OTW

CLIP_OTW
4.7K
3.3V
Q1
LED2
Red
R28
332
GND

STANDBY

STANDBY
4.7K
3.3V
Q2
LED3
Yellow
R29
332
GND

FAULT

FAULT
4.7K
3.3V
Q3
LED4
Red
R30
332
GND

MUTE

MUTE
3.3V
Q4
IRLMS5703
LED5
Orange
R31
332
GND

STANDBY CONTROL

STANDBY
S1
GND

OSCILLATOR DITHER CIRCUIT

3.3V
R43 15.0K
R44 15.0K
GND
OA1:B
TLV2462AQPWR
R45 10K
R47 8.25K
R46 15.0K
C53 1.0ufd/25V
OA1:C
TLV2462AQPWR
R48 470K
JP1
REXT
OA1:A
TLV2462AQPWR
C54 0.1ufd/16V
GND

EMI FILTER

PVDD
3.3V
C42 0.1ufd/16V
VR1
UA78M33CDCY
C3 330ufd/25V
C2 330ufd/25V
L5 10uH
C41 2200pfd/50V
C40 .082ufd/50V
C39 4.7ufd/16V
C1 4.7ufd/16V
12V
R33 332
LED1 Green

PA1

R1 47
R6 20.0K
C10 0.33ufd/16V
R35 10K
R32 10K
C16 0.1ufd/16V
R34 10K
R7 20.0K
C21 0.1ufd/16V
C4 0.1ufd/50V
OSC_SYNC
I2C_ADDR
SDA
SCL
FAULT
MUTE
STANDBY
D_BYP
CLIP_OTW
GND
SGND
REXT
A_BYP
IN_M
IN1_P
IN2_P
IN3_P
IN4_P
PVDD
PGND
OUT1_M
OUT1_P
OUT2_M
OUT2_P
CPC_TOP
CP
CPC_BOT
OUT3_M
OUT3_P
OUT4_M
OUT4_P
C34 1.0ufd/16V
C33 0.1ufd/50V
TAS5414ADKD

SNUBBERS

R2 5.6 C7 1000pfd/50V
R3 5.6 C9 1000pfd/50V
R4 5.6 C13 1000pfd/50V
R5 5.6 C15 1000pfd/50V
R8 5.6 C22 1000pfd/50V
R9 5.6 C24 1000pfd/50V
R12 5.6 C28 1000pfd/50V
R15 5.6 C32 1000pfd/50V
C17 1.0ufd/25V
C18 1.0ufd/25V

DEMODULATION FILTERS

CHANNEL 1
L1
C5 0.47ufd/100V
C6 0.15ufd/25V
C8 0.15ufd/25V
CH1−
CH1+
CHANNEL 2
L2
C11 0.47ufd/100V
C12 0.15ufd/25V
C14 0.15ufd/25V
CH2−
CH2+
CHANNEL 3
L3
C19 0.47ufd/100V
C20 0.15ufd/25V
C23 0.15ufd/25V
CH3−
CH3+
CHANNEL 4
L4
C26 0.47ufd/100V
C27 0.15ufd/25V
C30 0.15ufd/25V
CH4−
CH4+

PS IN ANALOG OUTPUTS

J2
GND
R39 1.0
C52 .01ufd/25V
R41 1.0
C51 .01ufd/25V
R25 1.0
C48 .01ufd/25V
R24 1.0
C47 .01ufd/25V
R21 1.0
C43 .01ufd/25V
R20 1.0
C45 .01ufd/25V
R19 1.0
C37 .01ufd/25V
R18 1.0
C38 .01ufd/25V

ANALOG INPUTS

IN1P RCA
IN2P RCA
IN3P RCA
IN4P RCA
R36 49.9K
R38 49.9K
R40 49.9K
R42 49.9K

EMI SNUBBERS

C25 1.0ufd/16V
R10 499
C31 1200pfd/50V
R11 499
C35 1.0ufd/16V
R16 499
C36 1200pfd/50V
R17 499
C50 1.0ufd/16V
R26 499
C49 1200pfd/50V
R27 499
C46 1.0ufd/16V
R22 499
C44 1200pfd/50V
R23 499

*** WARNING ***

THE OPERATING TEMPERATURE OF THE TAS5414ADKD MAY RISE ABOVE 60 DEGREES CENTIGRADE DURING NORMAL OPERATION.

TEXAS INSTRUMENTS

CX	PROJECT: TAS5414A EVALUATION BOARD		
Design Team: GREGG SCOTT			
Schematic Rev: NC	Mod: NC	PCB Rev: NC	Sheet 1 of 3
Save Date: SEPTEMBER 11, 2007	Print Date Tue Sep 11, 2007		
Filename: TAS5414AEVM3.SCH			Drawn By: LDN

REVISION CHANGES

REVISION	DESCRIPTION	DATE	APPROVAL
NC	RELEASED	11SEPT2007	GJS

Spare Gate Table		
Last Used	Not Used	Spare Gates
C54		
HW4		
IN1P		
IN2P		
IN3P		
IN4P		
J2		
JP1		
L5		
LED5		
LEDPIPE		
OA1		
PA1		
Q4		
R48		
S1		
SH1		
VR1		

BOM ONLY

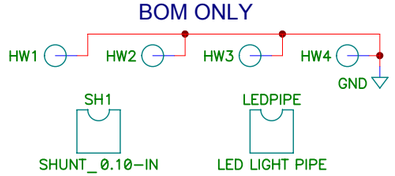

MISSING FROM SEQUENCE

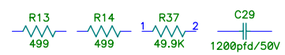

TEXAS INSTRUMENTS

CX	PROJECT: TAS5414A EVALUATION BOARD			
Design Team: GREGG SCOTT				
Schematic Rev: NC	Mod: NC	PCB Rev: NC	Sheet 2 of 3	
Save Date: SEPTEMBER 11, 2007	Print Date Tue Sep 11, 2007			
Filename: TAS5414AEVM3.SCH				Drawn By: LDN

TEXAS INSTRUMENTS DISCLAIMER

DISCLAIMER

The information and materials ("Materials") provided here are provided by Texas Instruments Incorporated ("TI") as a service to its customers and/or suppliers, and may be used for informational purposes only, and only subject to the following terms. By downloading or viewing these Materials, you are signifying your assent to these terms.

1.) These preliminary evaluation schematics are intended for use for PRELIMINARY ENGINEERING DEVELOPMENT AND EVALUATION PURPOSES ONLY and are not considered by Texas Instruments to be fit as a basis for establishing production products or systems. This information may be incomplete in several respects, including but not limited to information relating to required design, marketing, and/or manufacturing-related protective considerations and product safety measures typically found in the end-product incorporating the goods.

2.) Accordingly, neither TI nor its suppliers warrant the accuracy or completeness of the information, text, graphics, links or other items contained within the Materials. TI may make changes to the Materials, or to the products described therein, at any time without notice. TI makes no commitment to update the Materials.

3.) TI assumes no liability for applications assistance, customer product design, software performance, or services that may be described or referenced in the Materials. The user assumes all responsibility and liability for proper and safe design and handling of goods. Accordingly, the user indemnifies TI from all claims arising from its use of the Materials.

4.) TI currently deals with various customers for products, and therefore our arrangement with the user will not be exclusive. TI makes no representations regarding the commercial availability of non-TI components that may be referenced in the Materials.

5.) No license is granted under any patent right or other intellectual property right of TI covering or relating to any combination, machine, or process in which such TI products or services might be or are used. Except as expressly provided herein, TI and its suppliers do not grant any express or implied right to you under any patents, copyrights, trademarks, or trade secret information.

6.) Performance tests and ratings, to the extent referenced in the Materials, are measured using specific computer systems and/or components and reflect the approximate performance of TI products as measured by those tests. Any difference in system hardware or software design or configuration may affect actual performance. Buyers should consult other sources of information to evaluate the performance of systems or components they are considering purchasing.

7.) Resale of TI's products or services with statements different from or beyond the parameters stated by TI for that product or service in official TI data books or data sheets voids all express and any implied warranties for the associated TI product or service, and is an unfair and deceptive business practice, and TI is not responsible for any such use.

8.) The Materials are copyrighted and any unauthorized use may violate copyright, trademark, and other laws. You may only download one copy for your internal use only, unless you are specifically licensed to do otherwise by TI in writing. This is a license, not a transfer of title, and is subject to the following restrictions: You may not:

(a) modify the Materials (including any associated warranties, conditions, limitations or notices) or use them for any commercial purpose, or any public display, performance, sale or rental;

(b) decompile, reverse engineer, or disassemble software Materials except and only to the extent permitted by applicable law;

(c) remove any copyright or other proprietary notices from the Materials;

(d) transfer the Materials to another person. You agree to prevent any unauthorized copying of the Materials. TI may terminate this license at any time if you are in breach of the terms of this Agreement. Upon termination, you will immediately destroy the Materials.

9.) THE MATERIALS ARE PROVIDED "AS IS" WITHOUT ANY EXPRESS OR IMPLIED WARRANTY OF ANY KIND INCLUDING WARRANTIES OF MERCHANTABILITY, NONINFRINGEMENT OF INTELLECTUAL PROPERTY, OR FITNESS FOR ANY PARTICULAR PURPOSE. IN NO EVENT SHALL TI OR ITS SUPPLIERS BE LIABLE FOR ANY DAMAGES WHATSOEVER (INCLUDING, WITHOUT LIMITATION, DAMAGES FOR LOSS OF PROFITS, BUSINESS INTERRUPTION, LOSS OF INFORMATION) ARISING OUT OF THE USE OF OR INABILITY TO USE THE MATERIALS, EVEN IF TI HAS BEEN ADVISED OF THE POSSIBILITY OF SUCH DAMAGES.

TEXAS INSTRUMENTS

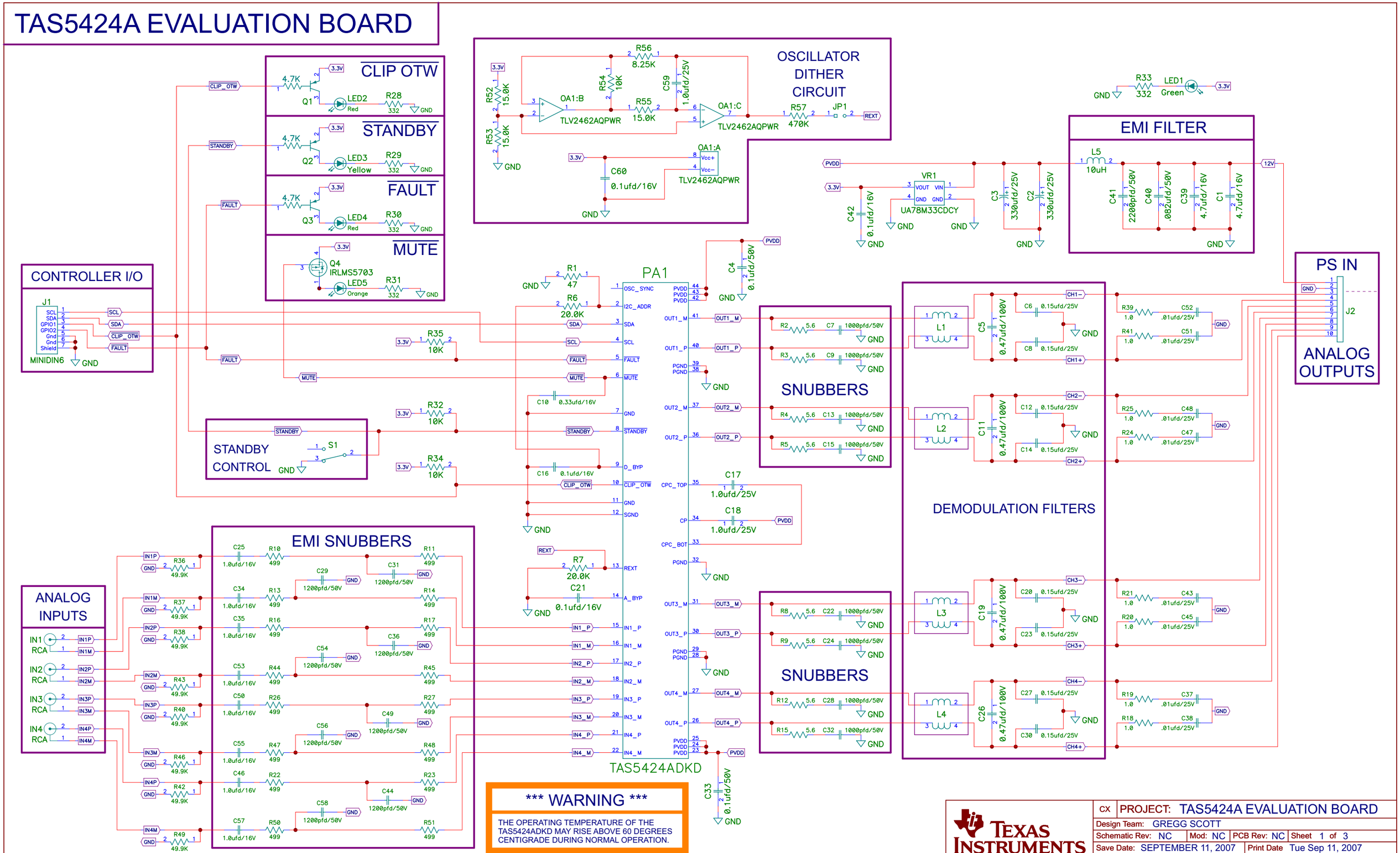
TAS5424A EVALUATION BOARD
CLIP OTW
STANDBY
FAULT
MUTE
OSCILLATOR DITHER CIRCUIT
EMI FILTER
CONTROLLER I/O
PA1
SNUBBERS
DEMODULATION FILTERS
PS IN
ANALOG OUTPUTS
STANDBY CONTROL
EMI SNUBBERS
ANALOG INPUTS
TAS5424ADKD
*** WARNING ***
THE OPERATING TEMPERATURE OF THE TAS5424ADKD MAY RISE ABOVE 60 DEGREES CENTIGRADE DURING NORMAL OPERATION.
TEXAS INSTRUMENTS
CX PROJECT: TAS5424A EVALUATION BOARD
Design Team: GREGG SCOTT
Schematic Rev: NC
Mod: NC
PCB Rev: NC
Sheet 1 of 3
Save Date: SEPTEMBER 11, 2007
Print Date Tue Sep 11, 2007
Filename: TAS5424AEVM3.SCH
Drawn By: LDN

REVISION CHANGES

REVISION	DESCRIPTION	DATE	APPROVAL
0	RELEASED	11SEPT2007	GJS

Spare Gate Table		
Last Used	Not Used	Spare Gates
C60		
HW4		
IN4		
J2		
JP1		
L5		
LED5		
LEDPIPE		
OA1		
PA1		
Q4		
R57		
S1		
SH1		
VR1		

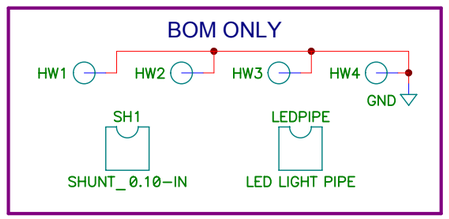

CX	PROJECT: TAS5424A EVALUATION BOARD			
Design Team: GREGG SCOTT				
Schematic Rev: NC	Mod: NC	PCB Rev: NC	Sheet 2 of 3	
Save Date: SEPTEMBER 11, 2007		Print Date Tue Sep 11, 2007		
Filename: TAS5424AEVM3.SCH				Drawn By: LDN

TEXAS INSTRUMENTS DISCLAIMER

DISCLAIMER

The information and materials ("Materials") provided here are provided by Texas Instruments Incorporated ("TI") as a service to its customers and/or suppliers, and may be used for informational purposes only, and only subject to the following terms. By downloading or viewing these Materials, you are signifying your assent to these terms.

1.) These preliminary evaluation schematics are intended for use for PRELIMINARY ENGINEERING DEVELOPMENT AND EVALUATION PURPOSES ONLY and are not considered by Texas Instruments to be fit as a basis for establishing production products or systems. This information may be incomplete in several respects, including but not limited to information relating to required design, marketing, and/or manufacturing-related protective considerations and product safety measures typically found in the end-product incorporating the goods.

2.) Accordingly, neither TI nor its suppliers warrant the accuracy or completeness of the information, text, graphics, links or other items contained within the Materials. TI may make changes to the Materials, or to the products described therein, at any time without notice. TI makes no commitment to update the Materials.

3.) TI assumes no liability for applications assistance, customer product design, software performance, or services that may be described or referenced in the Materials. The user assumes all responsibility and liability for proper and safe design and handling of goods. Accordingly, the user indemnifies TI from all claims arising from its use of the Materials.

4.) TI currently deals with various customers for products, and therefore our arrangement with the user will not be exclusive. TI makes no representations regarding the commercial availability of non-TI components that may be referenced in the Materials.

5.) No license is granted under any patent right or other intellectual property right of TI covering or relating to any combination, machine, or process in which such TI products or services might be or are used. Except as expressly provided herein, TI and its suppliers do not grant any express or implied right to you under any patents, copyrights, trademarks, or trade secret information.

6.) Performance tests and ratings, to the extent referenced in the Materials, are measured using specific computer systems and/or components and reflect the approximate performance of TI products as measured by those tests. Any difference in system hardware or software design or configuration may affect actual performance. Buyers should consult other sources of information to evaluate the performance of systems or components they are considering purchasing.

7.) Resale of TI's products or services with statements different from or beyond the parameters stated by TI for that product or service in official TI data books or data sheets voids all express and any implied warranties for the associated TI product or service, and is an unfair and deceptive business practice, and TI is not responsible for any such use.

8.) The Materials are copyrighted and any unauthorized use may violate copyright, trademark, and other laws. You may only download one copy for your internal use only, unless you are specifically licensed to do otherwise by TI in writing. This is a license, not a transfer of title, and is subject to the following restrictions: You may not:

(a) modify the Materials (including any associated warranties, conditions, limitations or notices) or use them for any commercial purpose, or any public display, performance, sale or rental;

(b) decompile, reverse engineer, or disassemble software Materials except and only to the extent permitted by applicable law;

(c) remove any copyright or other proprietary notices from the Materials;

(d) transfer the Materials to another person. You agree to prevent any unauthorized copying of the Materials. TI may terminate this license at any time if you are in breach of the terms of this Agreement. Upon termination, you will immediately destroy the Materials.

9.) THE MATERIALS ARE PROVIDED "AS IS" WITHOUT ANY EXPRESS OR IMPLIED WARRANTY OF ANY KIND INCLUDING WARRANTIES OF MERCHANTABILITY, NONINFRINGEMENT OF INTELLECTUAL PROPERTY, OR FITNESS FOR ANY PARTICULAR PURPOSE. IN NO EVENT SHALL TI OR ITS SUPPLIERS BE LIABLE FOR ANY DAMAGES WHATSOEVER (INCLUDING, WITHOUT LIMITATION, DAMAGES FOR LOSS OF PROFITS, BUSINESS INTERRUPTION, LOSS OF INFORMATION) ARISING OUT OF THE USE OF OR INABILITY TO USE THE MATERIALS, EVEN IF TI HAS BEEN ADVISED OF THE POSSIBILITY OF SUCH DAMAGES.

TEXAS INSTRUMENTS

EVALUATION BOARD/KIT IMPORTANT NOTICE

Texas Instruments (TI) provides the enclosed product(s) under the following conditions:

This evaluation board/kit is intended for use for **ENGINEERING DEVELOPMENT, DEMONSTRATION, OR EVALUATION PURPOSES ONLY** and is not considered by TI to be a finished end-product fit for general consumer use. Persons handling the product(s) must have electronics training and observe good engineering practice standards. As such, the goods being provided are not intended to be complete in terms of required design-, marketing-, and/or manufacturing-related protective considerations, including product safety and environmental measures typically found in end products that incorporate such semiconductor components or circuit boards. This evaluation board/kit does not fall within the scope of the European Union directives regarding electromagnetic compatibility, restricted substances (RoHS), recycling (WEEE), FCC, CE or UL, and therefore may not meet the technical requirements of these directives or other related directives.

Should this evaluation board/kit not meet the specifications indicated in the User's Guide, the board/kit may be returned within 30 days from the date of delivery for a full refund. THE FOREGOING WARRANTY IS THE EXCLUSIVE WARRANTY MADE BY SELLER TO BUYER AND IS IN LIEU OF ALL OTHER WARRANTIES, EXPRESSED, IMPLIED, OR STATUTORY, INCLUDING ANY WARRANTY OF MERCHANTABILITY OR FITNESS FOR ANY PARTICULAR PURPOSE.

The user assumes all responsibility and liability for proper and safe handling of the goods. Further, the user indemnifies TI from all claims arising from the handling or use of the goods. Due to the open construction of the product, it is the user's responsibility to take any and all appropriate precautions with regard to electrostatic discharge.

EXCEPT TO THE EXTENT OF THE INDEMNITY SET FORTH ABOVE, NEITHER PARTY SHALL BE LIABLE TO THE OTHER FOR ANY INDIRECT, SPECIAL, INCIDENTAL, OR CONSEQUENTIAL DAMAGES.

TI currently deals with a variety of customers for products, and therefore our arrangement with the user **is not exclusive.**

TI assumes **no liability for applications assistance, customer product design, software performance, or infringement of patents or services described herein.**

Please read the User's Guide and, specifically, the Warnings and Restrictions notice in the User's Guide prior to handling the product. This notice contains important safety information about temperatures and voltages. For additional information on TI's environmental and/or safety programs, please contact the TI application engineer or visit www.ti.com/esh.

No license is granted under any patent right or other intellectual property right of TI covering or relating to any machine, process, or combination in which such TI products or services might be or are used.

FCC Warning

This evaluation board/kit is intended for use for **ENGINEERING DEVELOPMENT, DEMONSTRATION, OR EVALUATION PURPOSES ONLY** and is not considered by TI to be a finished end-product fit for general consumer use. It generates, uses, and can radiate radio frequency energy and has not been tested for compliance with the limits of computing devices pursuant to part 15 of FCC rules, which are designed to provide reasonable protection against radio frequency interference. Operation of this equipment in other environments may cause interference with radio communications, in which case the user at his own expense will be required to take whatever measures may be required to correct this interference.

EVM WARNINGS AND RESTRICTIONS

It is important to operate this EVM within the input voltage range of 8 V to 20 V and the output voltage range of 8 V to 20 V.

Exceeding the specified input range may cause unexpected operation and/or irreversible damage to the EVM. If there are questions concerning the input range, please contact a TI field representative prior to connecting the input power.

Applying loads outside of the specified output range may result in unintended operation and/or possible permanent damage to the EVM. Please consult the EVM User's Guide prior to connecting any load to the EVM output. If there is uncertainty as to the load specification, please contact a TI field representative.

During normal operation, some circuit components may have case temperatures greater than 105°C. The EVM is designed to operate properly with certain components above 105°C as long as the input and output ranges are maintained. These components include but are not limited to linear regulators, switching transistors, pass transistors, and current sense resistors. These types of devices can be identified using the EVM schematic located in the EVM User's Guide. When placing measurement probes near these devices during operation, please be aware that these devices may be very warm to the touch.

Mailing Address: Texas Instruments, Post Office Box 655303, Dallas, Texas 75265
Copyright © 2007, Texas Instruments Incorporated

IMPORTANT NOTICE

Texas Instruments Incorporated and its subsidiaries (TI) reserve the right to make corrections, modifications, enhancements, improvements, and other changes to its products and services at any time and to discontinue any product or service without notice. Customers should obtain the latest relevant information before placing orders and should verify that such information is current and complete. All products are sold subject to TI's terms and conditions of sale supplied at the time of order acknowledgment.

TI warrants performance of its hardware products to the specifications applicable at the time of sale in accordance with TI's standard warranty. Testing and other quality control techniques are used to the extent TI deems necessary to support this warranty. Except where mandated by government requirements, testing of all parameters of each product is not necessarily performed.

TI assumes no liability for applications assistance or customer product design. Customers are responsible for their products and applications using TI components. To minimize the risks associated with customer products and applications, customers should provide adequate design and operating safeguards.

TI does not warrant or represent that any license, either express or implied, is granted under any TI patent right, copyright, mask work right, or other TI intellectual property right relating to any combination, machine, or process in which TI products or services are used. Information published by TI regarding third-party products or services does not constitute a license from TI to use such products or services or a warranty or endorsement thereof. Use of such information may require a license from a third party under the patents or other intellectual property of the third party, or a license from TI under the patents or other intellectual property of TI.

Reproduction of TI information in TI data books or data sheets is permissible only if reproduction is without alteration and is accompanied by all associated warranties, conditions, limitations, and notices. Reproduction of this information with alteration is an unfair and deceptive business practice. TI is not responsible or liable for such altered documentation. Information of third parties may be subject to additional restrictions.

Resale of TI products or services with statements different from or beyond the parameters stated by TI for that product or service voids all express and any implied warranties for the associated TI product or service and is an unfair and deceptive business practice. TI is not responsible or liable for any such statements.

TI products are not authorized for use in safety-critical applications (such as life support) where a failure of the TI product would reasonably be expected to cause severe personal injury or death, unless officers of the parties have executed an agreement specifically governing such use. Buyers represent that they have all necessary expertise in the safety and regulatory ramifications of their applications, and acknowledge and agree that they are solely responsible for all legal, regulatory and safety-related requirements concerning their products and any use of TI products in such safety-critical applications, notwithstanding any applications-related information or support that may be provided by TI. Further, Buyers must fully indemnify TI and its representatives against any damages arising out of the use of TI products in such safety-critical applications.

TI products are neither designed nor intended for use in military/aerospace applications or environments unless the TI products are specifically designated by TI as military-grade or "enhanced plastic." Only products designated by TI as military-grade meet military specifications. Buyers acknowledge and agree that any such use of TI products which TI has not designated as military-grade is solely at the Buyer's risk, and that they are solely responsible for compliance with all legal and regulatory requirements in connection with such use.

TI products are neither designed nor intended for use in automotive applications or environments unless the specific TI products are designated by TI as compliant with ISO/TS 16949 requirements. Buyers acknowledge and agree that, if they use any non-designated products in automotive applications, TI will not be responsible for any failure to meet such requirements.

Following are URLs where you can obtain information on other Texas Instruments products and application solutions:

Products		**Applications**	
Amplifiers	amplifier.ti.com	Audio	www.ti.com/audio
Data Converters	dataconverter.ti.com	Automotive	www.ti.com/automotive
DSP	dsp.ti.com	Broadband	www.ti.com/broadband
Interface	interface.ti.com	Digital Control	www.ti.com/digitalcontrol
Logic	logic.ti.com	Military	www.ti.com/military
Power Mgmt	power.ti.com	Optical Networking	www.ti.com/opticalnetwork
Microcontrollers	microcontroller.ti.com	Security	www.ti.com/security
RFID	www.ti-rfid.com	Telephony	www.ti.com/telephony
Low Power Wireless	www.ti.com/lpw	Video & Imaging	www.ti.com/video
		Wireless	www.ti.com/wireless

Mailing Address: Texas Instruments, Post Office Box 655303, Dallas, Texas 75265
Copyright © 2007, Texas Instruments Incorporated