THIS DRAWING CONTAINS INFORMATION THAT IS PROPRIETARY TO J.S.T. AND SHALL NOT BE USED OR SHOWN WITHOUT WRITTEN PERMISSION.

| ITEM | CONNECTOR PART NO. | DESCRIPTION | IPI CHECK | EOR CHECK |
|---|---|---|---|---|
| 1 | RASRSF-61T-250A | RIGHT-ANGLE RSF CONTACT, BRASS TIN-PLATED | | |
| 2 | UL1015, 16 AWG | BLACK | | |

Applicable Tooling

APPLICATOR

## Applicable Housings

| NO. OF CIRCUITS | KEYLESS HOUSING PART NO. | COVER PART NO. |
|---|---|---|
| 2 | RARSFP-2V-00 | RARSFC-2V |
| 3 | RARSFP-3V-00 | RARSFC-3V |
| 4 | RARSFP-4V-00 | RARSFC-4V |
| 5 | RARSFP-5V-00 | RARSFC-5V |
| 6 | RARSFP-6V-00 | RARSFC-6V |
| 7 | RARSFP-7V-00 | RARSFC-7V |
| 8 | RARSFP-8V-00 | RARSFC-8V |
| 9 | RARSFP-9V-00 | RARSFC-9V |
| 10 | RARSFP-10V-00 | RARSFC-10V |
| 11 | RARSFP-11V-00 | RARSFC-11V |
| 12 | RARSFP-12V-00 | RARSFC-12V |

Other housings and configurations are available. Please contact JST for details.

SUGGESTED MATING TAB

| | WITHOUT STABILIZER | WITH STABILIZER |
|---|---|---|
| DIM. "A" | 2.20 [0.087] MIN | 4.20 ±0.15 [0.165 ±0.006] |
| DIM. "B" | 7.40 [0.291] MIN | 7.98 [0.314] MIN |
| DIM. "C" | 5.90 [0.232] MAX | (7.6) |

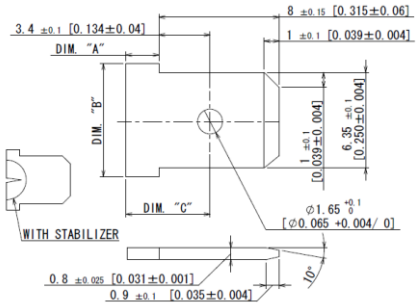


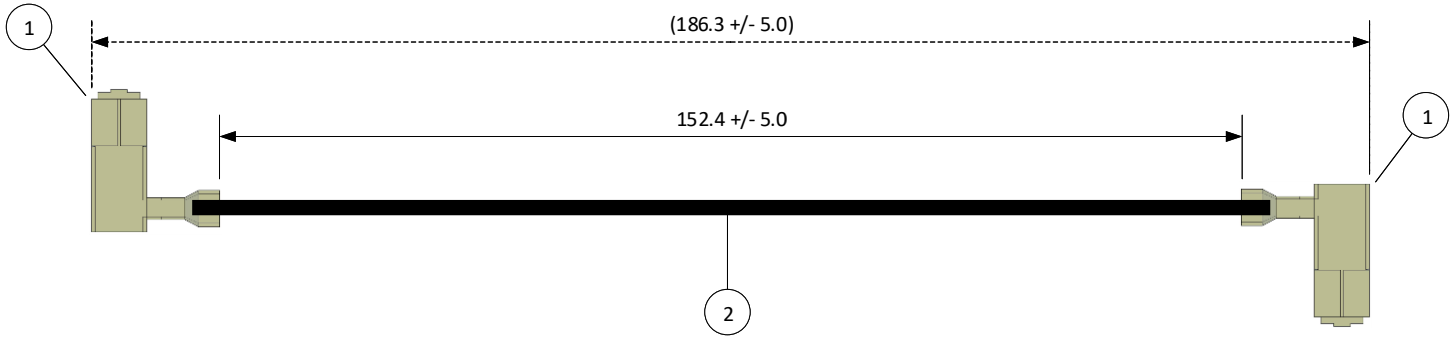


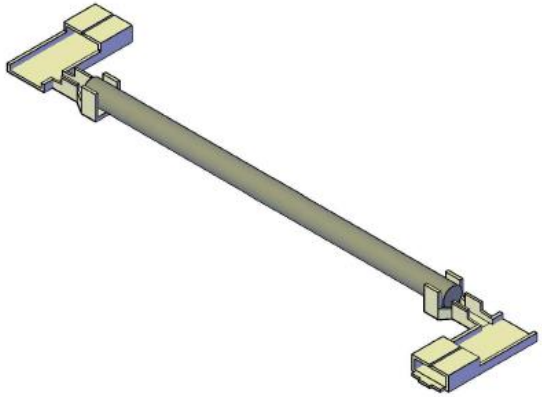

| SCALE | CUSTOMER NAME | CUSTOMER PART NO. |
|---|---|---|
| 1: 1 | | |
| DIMENSIONS: All dimensions are in MM with a tolerance of +/- 3.0 unless otherwise specified. | DESCRIPTION: 6" LIF, POS LOCK, .250, FLAG, DOUBLE-END LEADS, BRASS TIN-PLATED, F-F | |
| DRAWN BY: STEVEN PILKINGTON | ASSEMBLY PART NO.: ARASRSFRASRSF16K152B | |
| CHECKED BY: JUSTIN BAKER | DRAWING NO. & REVISION: GAM-167 | REVISED: 3/16/2016 |

| REV. | DESCRIPTION | DATE | BY |
|---|---|---|---|
| | | | |