ITEM NO.	PART NUMBER	DESCRIPTION	QTY.	COMPONENT NOTES
1	TLY-13	NEMA 5-15P	1	white overmold
2	TLY-18L	C13 female, 90°	1	white overmold
3	30-00245	Wire, 3C, 18 AWG, UL SVT, 300V, 105C, 6.3 mm, VW-1, PVC, white	1	
4	Label	Adhesive flag, 15x100mm	1	white with black font

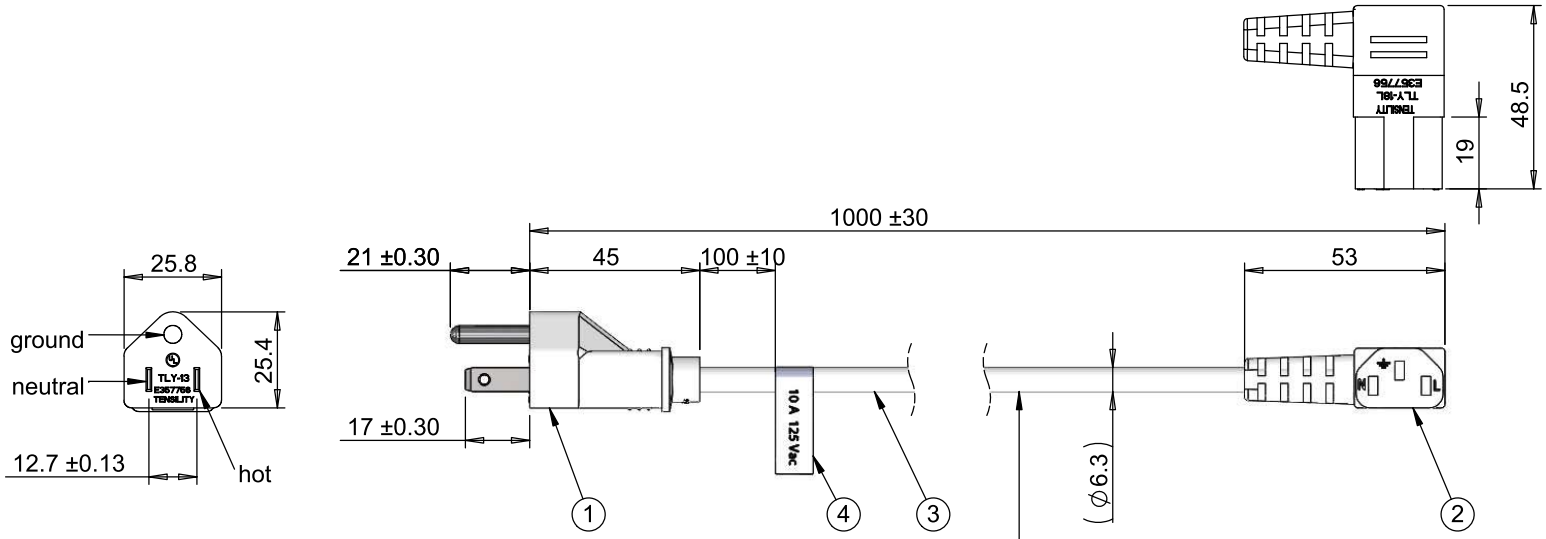

Wire marking: (UL) E339575 SVT 3X0.824mm2
(18AWG) 105C 300V VW-1 C(UL) SVT 3X0.824mm2
(18AWG) 105C 300V VW-1 TENSILITY HLE

Wiring Diagram

TLY-13	wire color	TLY-18L
hot	black	line
neutral	white	neutral
ground	green	ground

Notes:
Electrical requirements: 10 A at 125 Vac

Revision:	Date:	Description:
A	12/20/2012	Initial release

Prepared: DN — Digitally signed by DN Date: 2017.01.26 13:50:34 -08'00'

Verified: PS — Digitally signed by PS Date: 2017.01.26 16:16:41 -08'00'

Dimensions are in millimeters.
Tolerances:
X: ± 0.5 mm
X.X: ± 0.3 mm
X.XX: ± 0.05 mm

Notes:
RoHS compliant
Function test: no open, no short circuit, no intermittent

Description:
Ac cord, 1000 mm, U.S, NEMA 5-15P plug, TLY-13 to 90° C13, TLY-18L, 18 AWG, SVT, 30-00245, white

TENSILITY
tel 1.541.323.3228 800 877.670.7118
fax 1.541.323.4202 web tensility.com

Size: A
Part number: 11-00036
Scale: 1:2
Sheet 1 of 1

5 4 3 2 1