MATERIALS AND FINISHES

BODY: BRASS
PLATED TRI-M3

CONTACT: PHOSPHOR COPPER
PLATED SILVER

COUPLING NUT: BRASS
PLATED TRI-M3

INSULATOR: TEFLON

O-RING: SILICON RUBBER

PERFORMANCE REQUIREMENTS:

FREQUENCY RANGE: DC-3000MHz
TEMPERATURE RANGE: -40-+85°C
IMPEDANCE: 50 OHM
WITHSTAND VOLTAGE(AC): 2500V @0.5mA
VSWR: ≤1.08(0-3000MHz)
PIM3(2X20W): <-163dBC @ALL

NOTE: ADAPTORS SHIPPED WITH
POLYETHYLENE DUST CAP

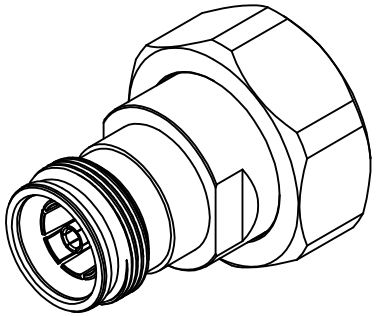

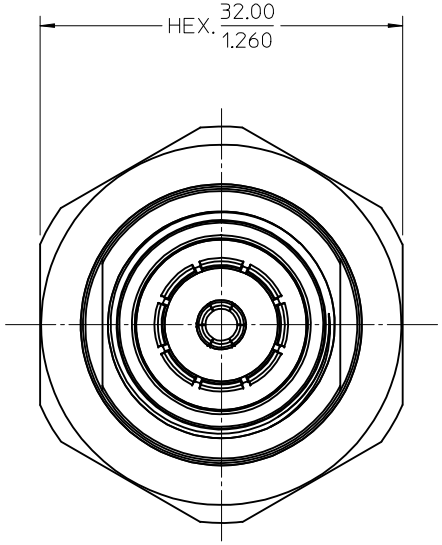


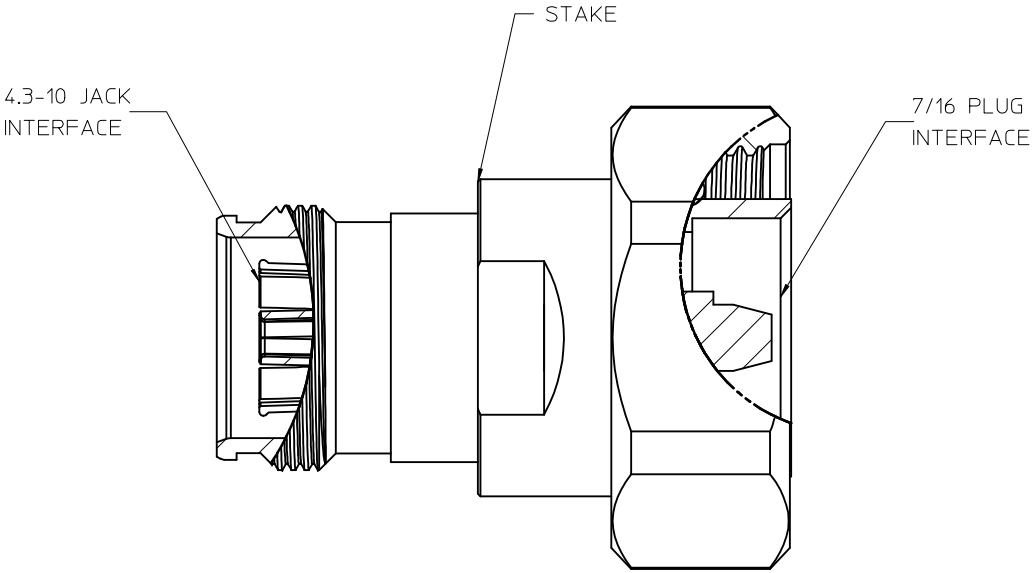


| | |
|---|---|
| IEC61169-54 | INTERFACE (4.3-10 PORT) |
| IEC60169-4 | INTERFACE (7/16 PORT) |
| SPECIFICATION | DESCRIPTION |

| | |
|---|---|
| 73386-7521 | ONE PIECE PER CARTON |
| 73386-7520 | BLANK |
| PART NO. | PACKAGING |

CHG: NEW RELEASE
EC NO: URF2016-0628 2016/01/15
DRWN:JWU83 2016/03/14
CHKD:YHUANG11 2017/03/21
APPR:MYE08
DESCRIPTION
A
REV

QUALITY SYMBOLS
E =0
E =0
E =0

GENERAL TOLERANCES (UNLESS SPECIFIED)

| | mm | INCH |
|---|---|---|
| 4 PLACES | ± --- | ± --- |
| 3 PLACES | ± --- | ± --- |
| 2 PLACES | ± --- | ± --- |
| 1 PLACE | ± --- | ± --- |
| 0 PLACE | ± --- | ± --- |

ANGULAR ± 2 °

DRAFT WHERE APPLICABLE MUST REMAIN WITHIN DIMENSIONS

DIMENSION STYLE: MM/IN
SCALE
DESIGN UNITS: METRIC
THIRD ANGLE PROJECTION

| | | |
|---|---|---|
| DRAWN BY | JWU83 | DATE 2016/01/15 |
| CHECKED BY | YHUANG11 | DATE 2016/03/14 |
| APPROVED BY | MYE08 | DATE 2017/03/21 |

TITLE
ADAPTER 7/16 PLUG TO 4.3/10 JACK

molex

MATERIAL NO. SEE TABLE
DOCUMENT NO. SD-73386-752
SHEET NO. 1 OF 1
SIZE C

THIS DRAWING CONTAINS INFORMATION THAT IS PROPRIETARY TO MOLEX INCORPORATED AND SHOULD NOT BE USED WITHOUT WRITTEN PERMISSION