THIS COPY IS PROVIDED ON A RESTRICTED BASIS AND IS NOT TO BE USED IN ANY WAY DETRIMENTAL TO THE INTERESTS OF PANDUIT CORP.

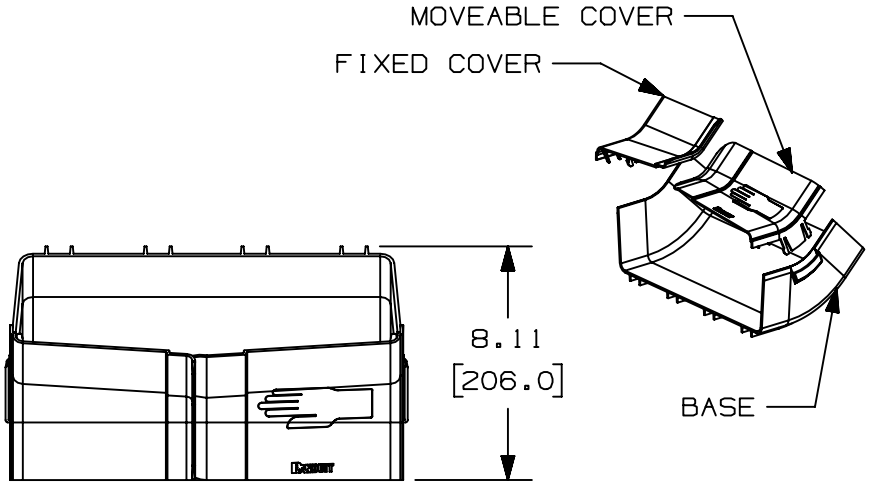

NOTES:

1. SEE CURRENT CATALOG FOR ADDITIONAL PART SUFFIXES TO INDICATE COLOR AND/OR PACKAGE QUANTITY.
2. THE FIBERRUNNER 12x4 INSIDE VERTICAL 45° ANGLE FITTING IS DESIGNED WITH A MINIMUM 2" (50.8) BEND RADIUS TO PROTECT FIBER OPTIC CABLES.
3. PARTS SUPPLIED:
   (1)- INSIDE VERTICAL 45° ANGLE BASE
   (1)- FIXED COVER SECTION,
   (1)- MOVEABLE COVER SECTION
4. DIMENSIONS IN PARENTHESES ARE IN METRIC.

PANDUIT PART NUMBER	WEIGHT	MATERIAL
FRIV4512X4**	1.39 LB/EACH (631g/EACH)	ABS
FRIV4512X4L**	1.39 LB/EACH (631g/EACH)	PC/ABS

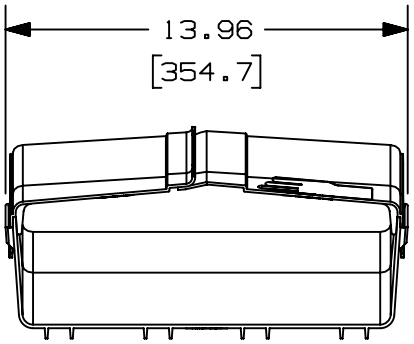

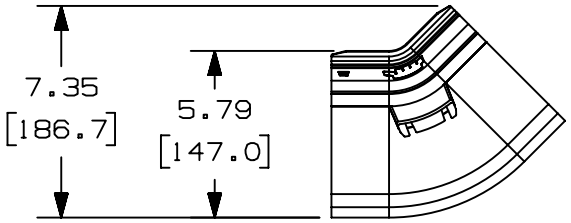

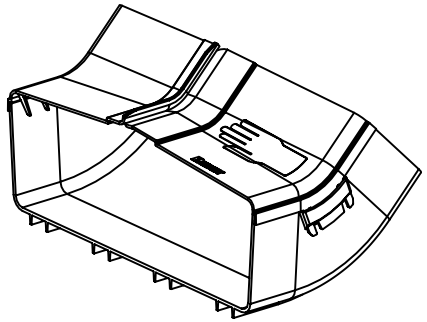

REV	DATE	BY	CHK	APR	DESCRIPTION	ECN
01B	8/21/20	MEX-JAGC	DWR	DWR	ADDED PART NUMBER	V09002DZ/11

TITLE
FIBERRUNNER 12x4 INSIDE VERTICAL 45° ANGLE FITTING (FRIV4512X4**, FRIV4512X4L**)
CUSTOMER DRAWING

ITEM REVISION NAME: D37617DS/01
DATASET FILE NAME: D37617DS_DC/01B

PANDUIT

MATERIAL: SEE PART NUMBER TABLE ABOVE

THIRD ANGLE PROJECTION

DRAWING NUMBER: 37617-77

DRAWN BY	DATE	CHK	SCALE	SIZE
JHNU	1-3-01	HIW	NONE	A

SHT 1 OF 1

D10100DA/20