THIS COPY IS PROVIDED ON A RESTRICTED BASIS AND IS NOT TO BE USED IN ANY WAY DETRIMENTAL TO THE INTERESTS OF PANDUIT CORP.

PANDUIT PART #	MILITARY PART NO. AND CLASS	STUD SIZE		DIMENSIONS in. [mm]					TOOLS
		ENG	MET	L ± .03 [0,51]	W ± .01 [0,25]	C ± .02 [0,38]	M ± .03 [0,51]	H ± .01 [0,25]	
PNF14-4R	MS25036-152 CLASS 1 & 2	#4	--	.78 [19,81]	.25 [6,35]	.18 [4,57]	.66 [16,76]	.12 [3,05]	CT-100A *CT-160 *CT-260 CT-600-A (CT-500CH) CT-600-A (CT-550CH) CT-1550 CT-1551 CT-2500 (CT-2550CH)
PMNF2-3R	--	--	M3	.76 [19,35]	.23 [5,88]	.19 [4,78]	.65 [16,63]	.13 [3,30]	
PNF14-6RN	MS25036-106 CLASS 1 & 2	#6	M3,5	.78 [19,81]	.25 [6,35]	.18 [4,57]	.63 [16,00]	.15 [3,81]	
PNF14-6R	MS25036-107 CLASS 1 & 2	#6	M3,5	.87 [22,10]	.31 [3,87]	.24 [6,10]	.71 [18,03]	.15 [3,81]	
PNF14-8R	MS25036-153 CLASS 1 & 2	#8	M4	.87 [22,10]	.31 [7,87]	.25 [6,35]	.71 [18,03]	.17 [4,32]	
PNF14-10R	MS25036-108 CLASS 1 & 2	#10	--	.85 [21,59]	.31 [7,87]	.29 [7,37]	.71 [18,03]	.20 [5,08]	
PMNF2-5R	--	--	M5	.88 [22,35]	.35 [8,92]	.29 [7,37]	.71 [18,03]	.21 [5,33]	
PNF14-14R	MS25036-154 CLASS 1 & 2	1/4"	M6	1.06 [26,92]	.46 [11,68]	.40 [10,16]	.85 [21,59]	.27 [6,86]	
PNF14-56R	MS25036-109 CLASS 1 & 2	5/16"	M8	1.06 [26,92]	.46 [11,68]	.40 [10,16]	.85 [21,59]	.34 [8,64]	
PNF14-38R	MS25036-110 CLASS 1 & 2	3/8"	--	1.14 [28,96]	.53 [13,46]	.45 [11,43]	.89 [22,61]	.40 [10,16]	

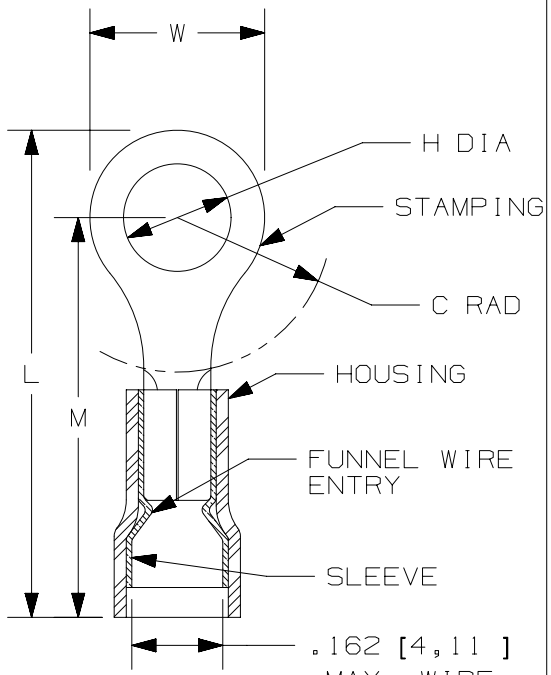

*PANDUIT APPROVED TOOL

NOTES:

1. USED FOR:
   A. 18-14 AWG [1,0-2,5 mm²] STRANDED COPPER WIRE
   B. 221°F [105°C] MAX. OPERATING TEMPERATURE
   C. 600V. MAX. BLDG WIRE
      (1000 V. MAX. IN SIGNS, FIXTURES & LUMINAIRES)
2. SEE www.panduit.com FOR PACKAGE QUANTITIES
3. MATERIAL:
   A. STAMPING: .032" [0,81] THK COPPER, TIN PLATED
   B. HOUSING: NYLON, BLUE
   C. SLEEVE: BRASS, TIN PLATED
4. DIMENSIONS IN BRACKETS ARE METRIC EQUIVALENT
5. WIRE STRIP LENGTH: 7/32 $^{+1/32}_{-0}$ [5,6 $^{+0,8}_{-0}$]

LISTED 587H E52164

CERTIFIED LR31212

REV	DATE	BY	CHK	APR	DESCRIPTION	ECN
09	1/18	TMR	TMR	RGB	AGENCY CERTIFICATION UPDATED	N41276BA-A41276

TITLE

#16-14 BARREL NYLON INSULATED, FUNNELED WIRE ENTRY RING TONGUE, .162 [4.11] MAX. WIRE INSULATION DIAMETER

CUSTOMER DRAWING

ITEM REVISION NAME: N41276BA/09

DATASET FILE NAME: N41276BA_DC/09

PANDUIT

UNLESS OTHERWISE SPECIFIED, DIMENSIONAL TOLERANCES ARE: IN [mm]

.X ± .XXX ±

.XX ± ANGLES ±

THIRD ANGLE PROJECTION

MATERIAL: SEE NOTES

DRAWING NUMBER: A41276

DRAWN BY	DATE	CHK	SCALE		SIZE
DAW		RLS	NONE	SHT 1 OF 1	A

D10100DA/16