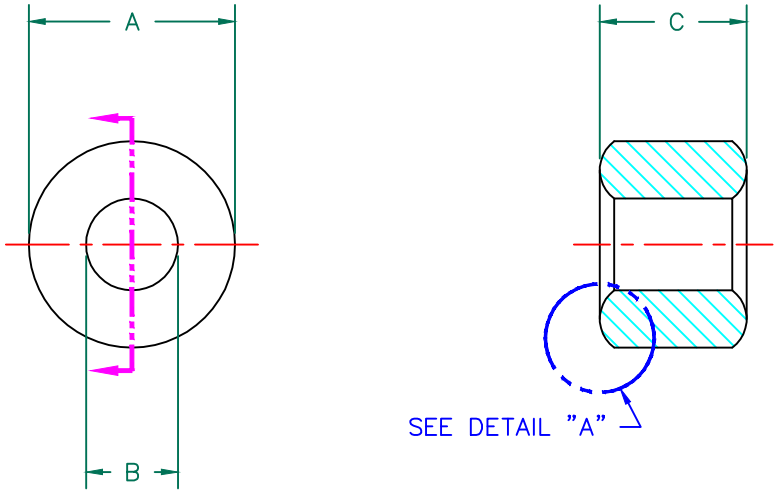

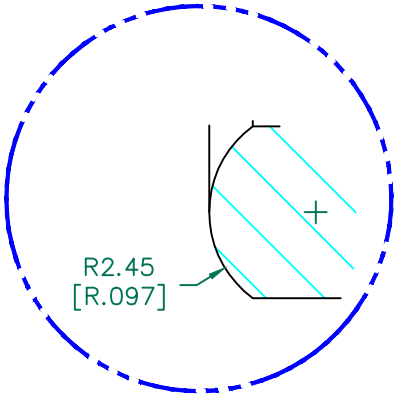

CHAMFER
DETAIL A
SCALE: 6:1

IMPEDANCE (Z)			
Frequency	25 MHz	100 MHz	300 MHz
Nominal (REF)	69 Ω	145 Ω	270 Ω
Minimum	- Ω	116 Ω	- Ω

Z vs. FREQUENCY
(REF. ONLY)

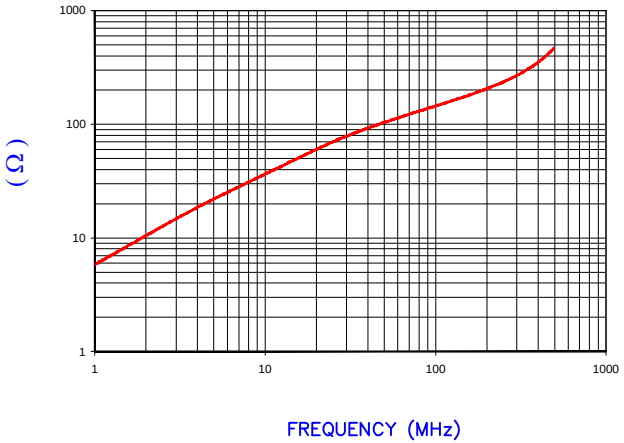

AGILENT E4991A Impedance/Material Analyzer
HP 16092A Test Fixture, REF#2999

FERRITE CORE DIMENSIONS (SPEC): mm [in]

A	14.27 [.562]	±	0.25 [.010]
B	6.35 [.250]	±	0.15 [.006]
C	10.16 [.400]	±	0.25 [.010]

WEIGHT/1000 6.07 kgs 13.39 lbs

NOTES:

1. COSMETIC SPECIFICATION REFER TO WI-QA-038.

SCALE DRAWING 1:1

28B0562-0R0

RoHS

DIMENSIONS ARE IN mm [INCHES].

REV	DESCRIPTION	DATE	INT
B	UPDATE LOGO	09/07/16	QIU
A	ORIGINAL DRAFT	04/15/09	JRK

This print is the property of Laird Tech. and is loaned in confidence subject to return upon request and with the understanding that no copies shall be made without the written consent of Laird Tech. All rights to design or invention are reserved.

Laird

PROJECT/PART NUMBER:	REV	PART TYPE:	DRAWN BY:
28B0562-0R0	B	CNZ CORE	JRK

DATE:	SCALE:	MATERIAL:
04/15/09	2 : 1	Ferrite
CAD # 28B0562-0R0-B	TOOL # B0562	