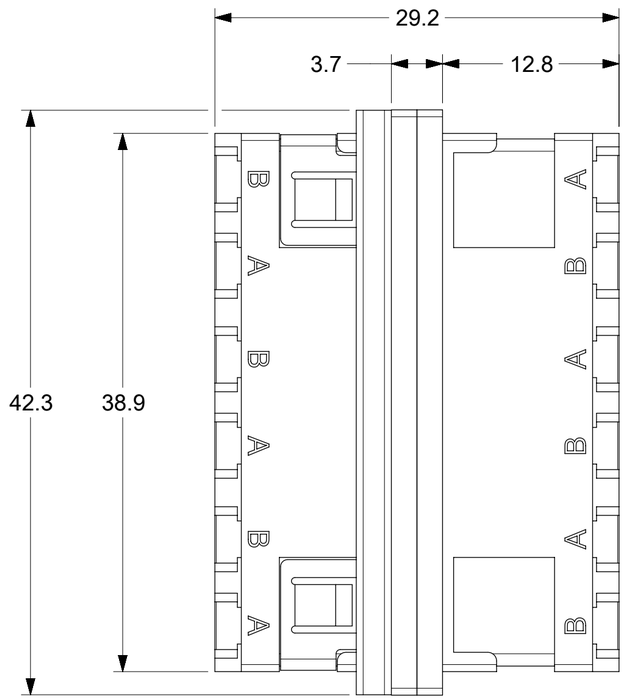

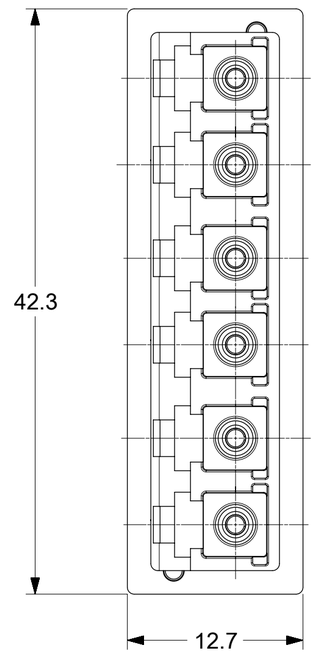

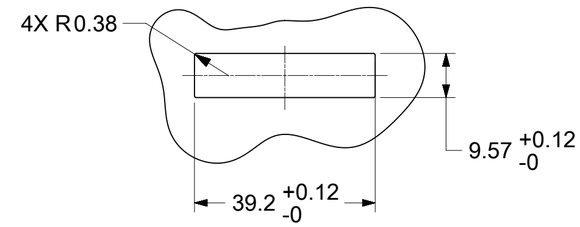

RECOMMENDED MOUNTING PATTERN

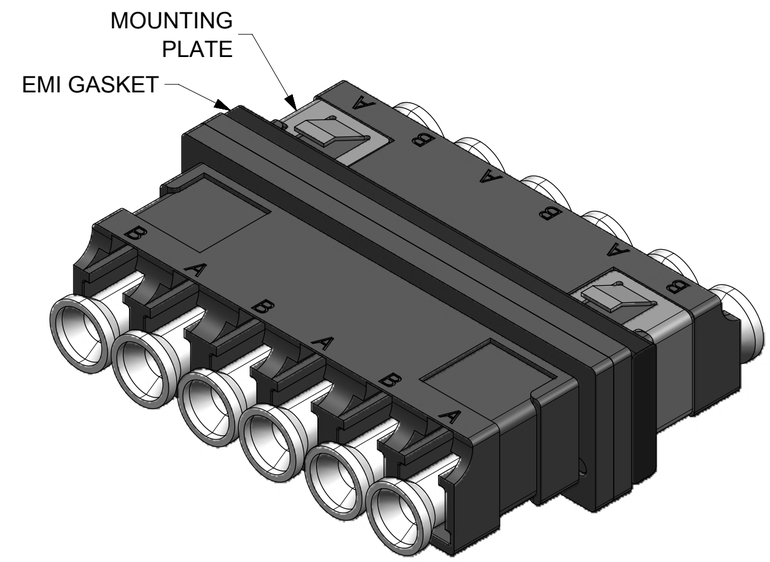

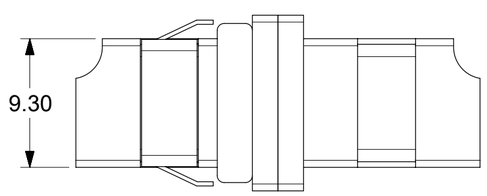

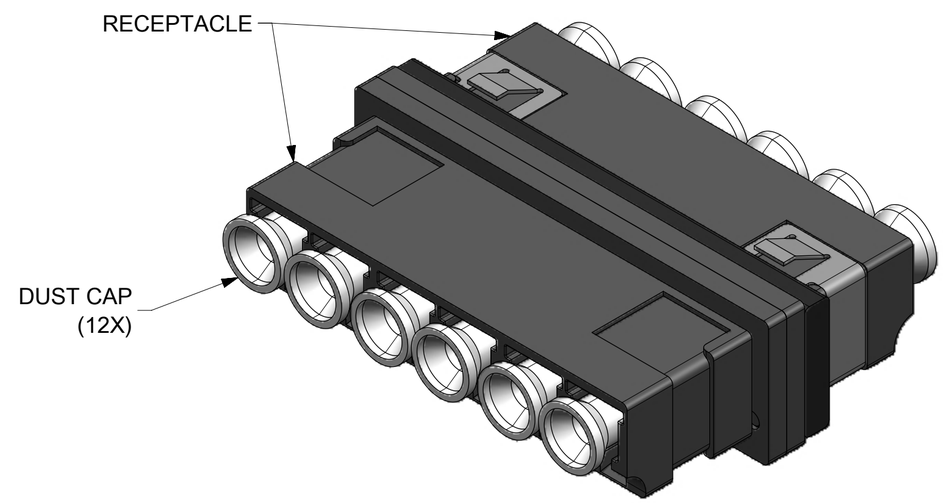

NOTES:

1. ALL DIMENSIONS ARE FOR REFERENCE ONLY.

2. DUST CAPS ARE SHOWN IN ISOMETRIC VIEWS ONLY.

3. MATERIALS:
   RECEPTACLES - ELECTRICALLY CONDUCTIVE RESIN, BLACK
   EMI GASKET - FABRIC-OVER FOAM
   SPLIT SLEEVES - CERAMIC
   MOUNTING PLATE - SS
   DUST CAPS - NYLON

4. RECOMMENDED PANEL THICKNESS - 1.6 mm.

SYMBOLS	THIS DRAWING CONTAINS INFORMATION THAT IS PROPRIETARY TO MOLEX ELECTRONIC TECHNOLOGIES, LLC AND SHOULD NOT BE USED WITHOUT WRITTEN PERMISSION					
FA = 0	DIMENSION UNITS: mm	SCALE: 1:1	CURRENT REV DESC:			molex
FC = 0	GENERAL TOLERANCES (UNLESS SPECIFIED)					
FD = 0	ANGULAR TOL ± °		EC NO: 614672			LC 1X6 EMI ADAPTER
S = 0	4 PLACES ±		DRWN: IGUMIN 2019/03/28			
▼ = 0	3 PLACES ±		CHK'D: WCHEN 2019/03/28			
C = 0	2 PLACES ±		APPR: WCHEN 2019/03/28			PRODUCT CUSTOMER DRAWING
☒ = 0	1 PLACE ±		INITIAL REVISION:			DOCUMENT NUMBER: 1061210217 / DOC TYPE: PSD / DOC PART: 000 / REVISION: A
■ = 0	0 PLACES ±		DRWN: IGUMIN 2019/03/28			
V = 0	DRAFT WHERE APPLICABLE MUST REMAIN WITHIN DIMENSIONS		APPR: WCHEN 2019/03/28			
			THIRD ANGLE PROJECTION	DRAWING: C-SIZE	SERIES: 106121	MATERIAL NUMBER: 1061210217 / CUSTOMER: / SHEET NUMBER: 1 OF 1

DOCUMENT STATUS	P1	RELEASE DATE	2019/03/28 23:35:23

FORMAT: master-tb-prod-C
REVISION: H
DATE: 2018/01/18