© – TE Connectivity. All Rights Reserved.

REVISIONS					
P	LTR	DESCRIPTION	DATE	DWN	APVD
	H	REVISED PER ECN-22-138298	09FEB2022	RZ	HL

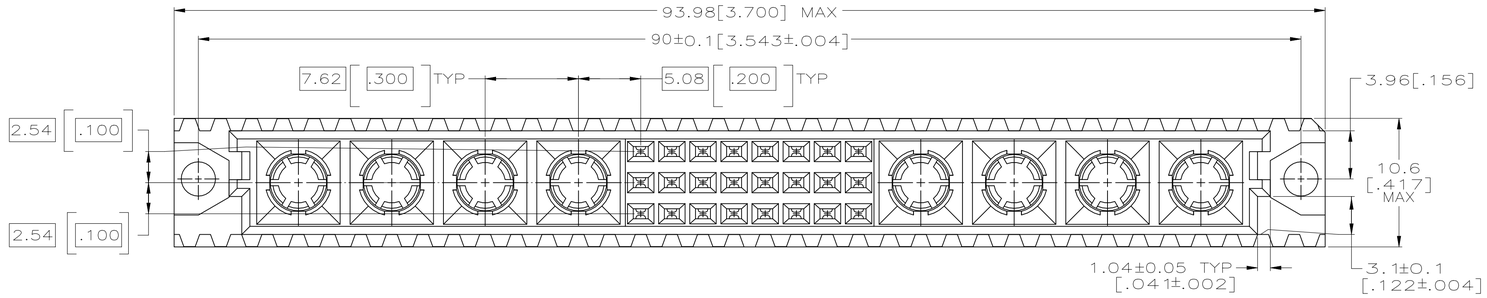

1. HOUSING MATERIAL: GLASS-FILLED POLYESTER. COLOR: GRAY.
2. CONTACT MATERIAL: PHOSPHOR BRONZE.
3. POWER CONTACT MATERIAL: BERYLLIUM COPPER.
4. CONTACT FINISH: DIN 41612 CLASS 2 IN CONTACT AREA. TIN-LEAD PLATE ON POSTS.
5. POWER CONTACT FINISH: DIN 41612 CLASS 2 ALL OVER.
6. PART NUMBER AND DATE CODE HOT STAMPED IN THIS APPROXIMATE AREA.
7. ACTION PIN POSTS REQUIRE 1.57[.062] MINIMUM THICK PC BOARD. RECOMMENDED PC BOARD DRILLED HOLES ARE Ø1.15±0.025[.0453±.0010] WITH 0.02-0.08[.001-.003] COPPER AND 0.008[.0003] MINIMUM TIN-LEAD PLATING. FINISHED HOLE AFTER PLATING IS Ø1.02±0.08[.040±.003].
8. HOT STAMPING ON THIS SIDE.
9. TAIL LENGTH AFTER SEATING IN PC BOARD.
10. POWER CONTACTS REQUIRE 3.13±0.08 [.123±.003] DIAMETER DRILLED HOLE WITH 0.05±0.25 [.002±.001] THICK COPPER AND 0.0127 [.0005] MINIMUM TIN-LEAD PLATING. FINISHED HOLE SIZE IS 3.0±0.08 [.118±.003].

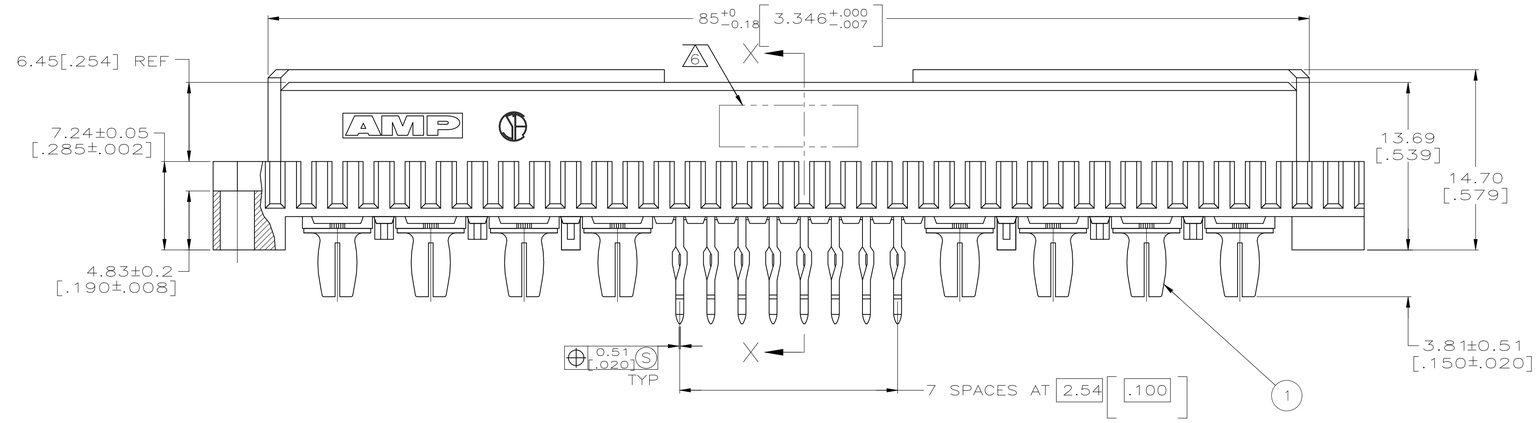

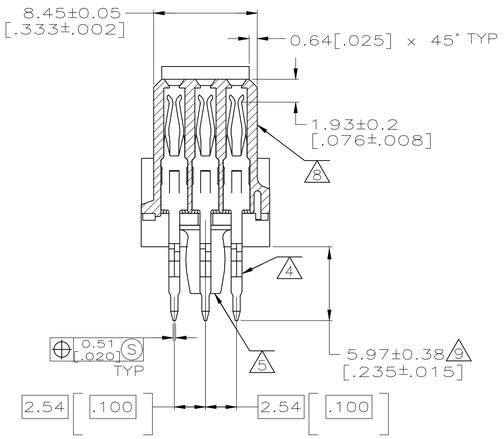

SECTION X-X

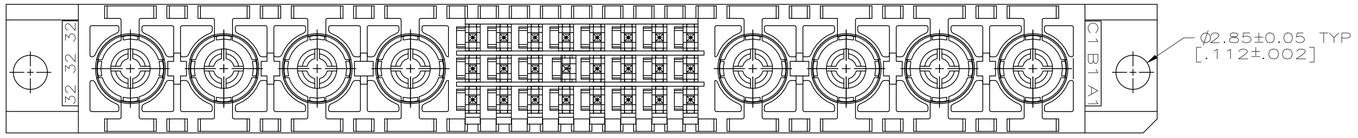

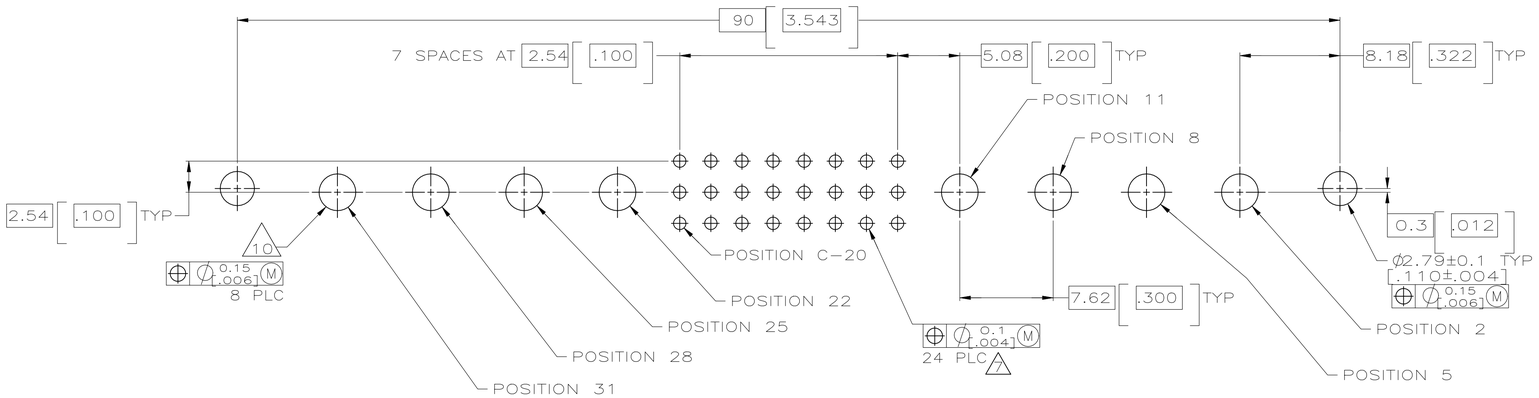

PC BOARD LAYOUT

OBSOLETE	2,5,8,11,22,25,28,31	B	8	148370-3
OBSOLETE	2,5,8,11,22,25,28,31	B	8	148370-2
	2,5,11,22,25,28,31	B	7	148370-1
	POSITIONS LOADED	ROWS	NO. OF POWER CONTACTS LOADED	PART NUMBER

13-20	C	8	148370-3 OBSOLETE
NONE	B	0	
13-20	A	8	
13-20	C	8	148370-2 OBSOLETE
13-20	B	8	
13-20	A	8	
13-20	C	8	148370-1
13-20	B	8	
13-20	A	8	
POSITIONS LOADED	ROWS	NO. OF SIGNAL CONTACTS LOADED	PART NUMBER

8	148370-3
8	148370-2
7	148370-1
1 POWER CONTACTS NO REQ'D	PART NUMBER

THIS DRAWING IS A CONTROLLED DOCUMENT.

DIMENSIONS: mm

TOLERANCES UNLESS OTHERWISE SPECIFIED:
0 PLC ± –
1 PLC ± –
2 PLC ± 0.13[.005]
3 PLC ± –
4 PLC ± –
ANGLES ± –

MATERIAL HOUSING: 1 CONTACT: 2 POWER CONTACT: 3
FINISH CONTACT: 4 POWER CONTACT: 5

DWN L. BRINER 4/15/97
CHK R. PATTERSON 4/15/97
APVD R. PATTERSON 4/15/97
PRODUCT SPEC –
APPLICATION SPEC –
WEIGHT 0.000000
CUSTOMER DRAWING

TE Connectivity

NAME RECEPTACLE ASSEMBLY, EUROCARD, TYPE M, 24 POSITION –

SIZE	CAGE CODE	DRAWING NO	RESTRICTED TO
A1	00779	C-148370	–

SCALE 4:1 SHEET 1 OF 1 REV H

4805 (1/15)